MICROFILMED-75

LETTING DATE 7-17-75

HAZELET & ERDAL CONSULTING ENGINEERS FILE NO. 955

REVISED △ Indicates Revision for G.M. Barrier DATE 7-75 BY JBW
REVISED △ Structural Steel Quantities Revised DATE 9-5-75
REVISED △ Indicates Revision for G.M. Barrier DATE 3-76
REVISED △ Replaces Barrier with Plinth 6-76

DESIGNED BY ____ CHECKED BY ____ DATE ____
DETAILED BY ____ CHECKED BY ____ DATE ____
TRACED BY ____ CHECKED BY ____ DATE ____

DEPARTMENT OF TRANSPORTATION
BUREAU OF HIGHWAYS

# JEFFERSON COUNTY
# LOUISVILLE-LEXINGTON ROAD
# I 64 E. B. SAFETY WIDENING

## ESTIMATED QUANTITIES

| SHEET DESIGNATION | SHEET NUMBER | CONCRETE CLASS "A" (CU. YDS.) | △ △△ CONCRETE CLASS "AA" (CU. YDS.) | SHEAR ② CONNECTORS (LUMP SUM) | △ △△ STEEL REINFORCEMENT (LBS.) | STRUCTURAL STEEL ① (LUMP SUM) | STRUCTURE EXCAVATION COMMON (CU. YDS.) | END BENT ⑤ BACKFILL (LUMP SUM) | 4" CONCRETE SLOPE PROTECTION (SQ. YDS.) | REMOVAL OF EXISTING ③ REINF. CONC. (LUMP SUM) | DECK DRAINAGE (LUMP SUM) | OVERHEAD SIGN SUPPORT (LUMP SUM) | △ BRIDGE RAILING-NEW (LIN. FT.) | BRIDGE △ RAILING ~~REMOVAL~~ RELOCATED (LIN. FT.) | PILES-14" CAST IN PLACE FURNISHED (LIN. FT.) | PILES-14" CAST IN PLACE DRIVEN (LIN. FT.) | LIGHTING (LUMP SUM) | MAINTAIN TRAFFIC ④ (LUMP SUM) | EXPANSION HOOK BOLT △ (EACH) |
|---|---|---|---|---|---|---|---|---|---|---|---|---|---|---|---|---|---|---|---|
| TITLE SHEET | 1 | | | | | | | | | | | | | | | | | | |
| GENERAL NOTES | 2-2A | | | | | | | | | | | | | | | | | | |
| LAYOUT | 3-4 | | | | | | | | | 1 | | | | | | | | 1 | |
| TYPICAL SECTIONS | 5 | | 22.6 | | 5029 | | | | | | | | | | | | | | |
| END BENT 10IE | 6-7 | 46.6 | ~~22.4~~ | | ~~5,015~~ | | | 1 | 285 | | | | | | 606 | 606 | | | |
| PIERS | 8 | 240.0 | 797.0 △ | | 21,222 | | 280 | | | | | | | | 1,571 | 1,571 | | | |
| STRUCTURAL STEEL | 9-22 | | ~~1127.4~~ △ | 1 | | 1 | | | | | | | | | | | | | |
| EXPANSION DAMS | 23-24 | | ~~632.0~~ | | ~~167,747~~ | ~~237759~~ △ | 186699 △ | | | | | | | | | | | | |
| SUPERSTRUCTURE | 25-30 | | ~~576.0~~ | | ~~163,120~~ | | | | | | 1 | | 25 | 890 | | | | | |
| CONSTRUCTION ELEVATIONS | 31-34 | | | | | | | | | | | | | | | | | | |
| PILE RECORD | 35-36 | | | | | | | | | | | | | | | | | | |
| SIGN SUPPORT | 37-40 | | | | | | | | | | | 1 | | | | | | | |
| LOG OF SOUNDINGS | 41 | | | | | | | | | | | | | | | | | | |
| BRIDGE LIGHTING | 42-43 | | | 797.0 △ | | 186699 △ | | | | | | | | | | | 1 | | |
| △ △ | 52 ~~54~~ | 56 △ | 22.6 | 1127.4 △ | 26251 | ~~237759~~ △ | | | | | | | | | | | | | |
| SUBTOTAL – SUBSTRUCTURE | | 286.6 | ~~22.4~~ | ~~632.0~~ | ~~26,237~~ | ~~167747~~ | 280 | 1 | 285 | | | | | | 2,177 | 2,177 | | | |
| SUBTOTAL – SUPERSTRUCTURE | | | ~~576.0~~ | 1 | ~~163,120~~ | 1 | | | | 1 | 1 | 1 | 25 | 890 | | | 1 | 1 | 2640 |
| TOTAL | | 286.6 | ~~598.4~~ | 1 | ~~189,357~~ | 1 | 280 | 1 | 285 | 1 | 1 | 1 | 25 | 890 | 2,177 | 2,177 | 1 | 1 | 2640 |
| DECK OVERLAY (Sheets 44 thru 50) For Quantities See Sheet 44. | | | | ~~654.6~~ | ~~193,998~~ | ~~264,010~~ △ | 212,950 △ | | | | | | | | | | | | |

~~232,85~~ △ 22773 △ ~~22773~~ △ △ ① Structural Steel weight is approximately ~~573,488~~ lbs. (Includes ~~22,800~~ lbs. for Expansion dams, shoes, & armored edges) included in lump sum bid for Structural Steel. (Includes ~~100,886~~ lbs. for raising Exp. Dams etc. as shown on Sheet 44.) 139,307

~~573459~~ ~~612,080~~ ~~612,592~~ △ ~~1150.0~~ △ 612,080 △

② Approximately 1858 lbs. included in Lump Sum Bid for Shear Connectors.

③ Approximately 890 L.F of deck slab, plinth, curb, & one wingwall to be removed. △ Plus 1206 L.F. of Guardrail, ~~Curb and Slab~~ △

④ Includes both traffic on surface streets and on I64.

⑤ Approximately 155 C.Y. End Bent Backfill and 250 C.Y. End Bent Structure Excavation Common. (see sheet 7)

For Bill of Incidental Materials See Sheets 7, 8, 22, & 24.

## SPECIAL PROVISIONS

NO. 12 JOINT SEALING COMPOUND ~~819.6~~ △
NO. 30-B MEMBRANE CURING OF CONCRETE STRUCTURES
NO. 35-B CLASS "AA" CONCRETE.
NO. 36-A SET-RETARDING ADMIXTURES FOR CONCRETE.
NO. 37-D PREFORMED COMPRESSION JOINT SEAL.
NO. 46-D WATER POLLUTION CONTROL.
NO. 48-A BRIDGE DECK REPAIRS.
NO. 73-A EPOXY GROUT AND BOND COAT.
NO. 75-A OPERATION OF CONSTRUCTION VEHICLES OVER PAVEMENT AND STRUCTURES.
NO. 80-B BLAST CLEANING AND PAINTING STRUCTURAL STEEL.
NO. 82-A ROADWAY LIGHTING SYSTEMS.
NO. 89-B REFLEX-REFLECTIVE MATERIAL.
NO. 90-A CONTRACT TIME.
NO. 99-A CONCRETE SURFACE FINISH.
NO. 101 WELDED STEEL BRIDGES.
NO. 102 COARSE AGGREGATE
NO. 108-B LATEX CONCRETE OVERLAY
NO. 111 TERMINATION OF CONTRACT IN PUBLIC INTEREST
NO. 112-A PORTLAND CEMENT CONCRETE OVERLAY

## SPECIAL NOTES

FOR MAINTENANCE OF TRAFFIC ON SURFACE STREETS
FOR DECK OVERLAY
FOR RUMBLE STRIPS
FOR RAISED PAVEMENT MARKERS

## REFERENCES

STANDARD DRAWINGS LISTED BELOW ARE CURRENT EDITION AND ARE TO BE USED WITH THESE PLANS

| | | |
|---|---|---|
| BGX-004 | BGB-001-01 | TSC-240 |
| BGX-005 | BGB-002-01 | TSC-241 |
| △ ~~BHA-003~~ | BGB-003-01 | TSC-245 |
| △ ~~BHA-004~~ | BJE-001-01 | TSC-246 |
| BPC-005-01 | BJE-002-01 | TSC-210 |
| | BJJ-003-01 | TSC-200-01 |
| | | TSC-260-02 |

Publications

Kentucky Bureau of Highways – Standard Specifications, current edition.

Kentucky Bureau of Highways – Uniform Traffic Control Devices, current edition.

Standard Highway Signs – Federal Highway Administration, current edition.

AWS D20-69 "Specifications for Welded Highway and Railway Bridges.

TITLE SHEET

PREPARED & SUBMITTED BY:
HAZELET & ERDAL
CONSULTING ENGINEERS
FILE NO. 955-00
By Robert Wood
Date May 30, 1975

STATE OF KENTUCKY ROBERT H. WOOD 1595 REGISTERED PROFESSIONAL ENGINEER

256 △ 54

I64 E.B. OVER PRESTON STREET SHEET 1 OF ~~51~~

COMMONWEALTH OF KENTUCKY
BUREAU OF HIGHWAYS
FRANKFORT
COUNTY OF
JEFFERSON
LOUISVILLE-LEXINGTON
ROAD

19238 / 1

STATION 267+00 P.E. PROJECT NO. I64-2(92)

| CONSTRUCTION PROJECT NO. | MAINTENANCE PROJECT NO. | DRAWING NO. |
|---|---|---|
| I64-2(100) 5 | | 19238 |

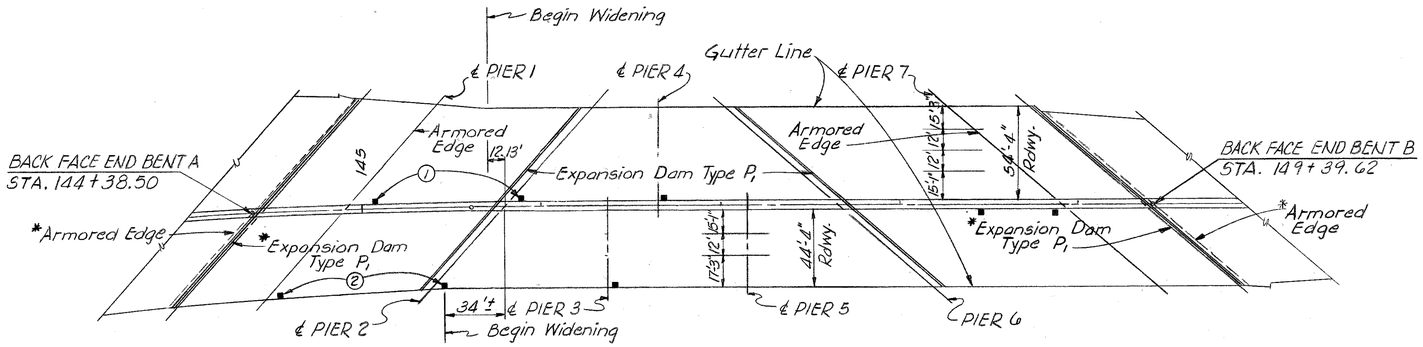


PLAN OF DECK OVERLAY @ 22ND ST.

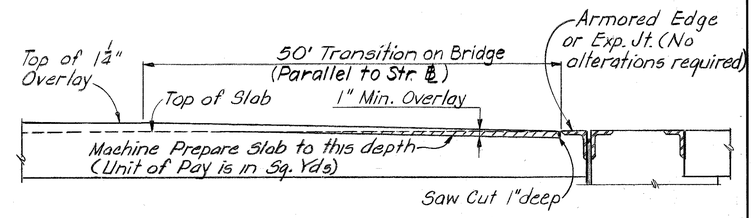


DECK OVERLAY TRANSITION AT END OF BRIDGE

Typ. except at End Bent 101E, 164 E.B. - See Shts. 7 & 49)

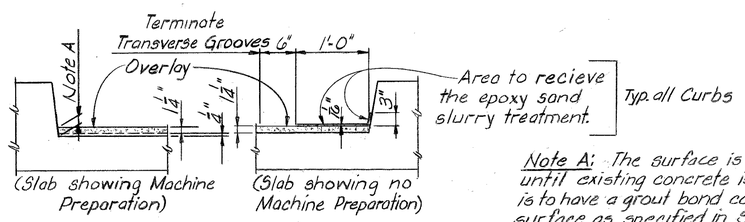


SECTION THRU CURB & GUTTER

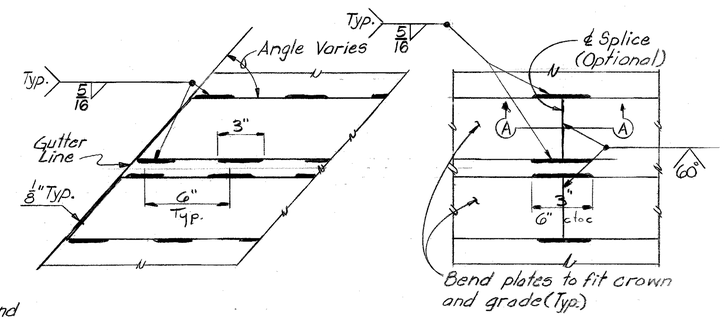


PLAN OF ARMORED EDGE

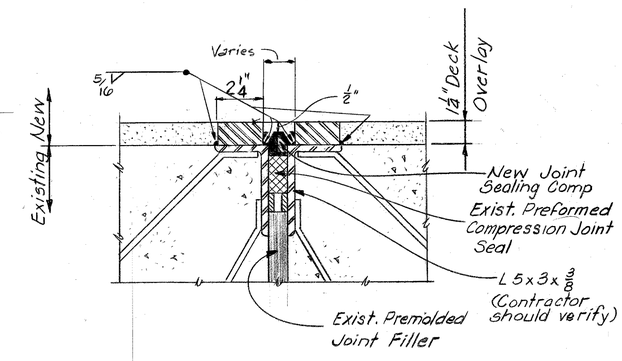


SECTION THRU ARMORED EDGE

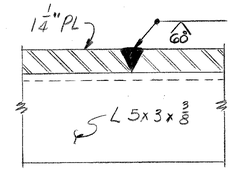


SECTION A-A

NOTES:

Epoxy Sand Slurry is to be applied on both sides of bridge for the entire length of the bridge as specified above after all outlined work has been completed. Care shall be taken to mask all joints. Epoxy Sand Slurry shall be done in accordance with Special Provisions No 48, current edition. All Surfaces to be in contact with the epoxy shall be sandblasted.

Place 1¼" minimum Deck Overlay plus additional required to fill machine prepared slab or patches. See Special Notes for "Resurfacing Bridges".

No longitudinal Construction Joint will be permitted in new overlay except at Lane lines. Unless permitted by the Engineer the transverse construction joint shall be limited to those at the expansion dams or armored edges.

*No alterations required

For Details of Expansion Dam Type P1 see Sheet 48

The expansion dam and armored edge dimensions are taken from the bridge design drawings. The Contractor shall obtain the plate lengths and verify the plate widths by field measurements.

All Expansion Dam and Armored Edge Steel shall be A242 unless noted.

Note A: The surface is to be sandblasted until existing concrete is absolutely clean and is to have a grout bond coat scrubbed into the surface as specified in Special Provisions 108 or 112, current edition. (Typical for all curbs with or without Machine Preparation.) Entire Bridge Deck to receive 1¼" Deck Overlay, unless noted.

① Type I Deck Drain (Typ @ Median Curb).

② Type II Deck Drain (Typ. @ Fascia Curb).

See Sheet 49 for Deck Drain modification.

ESTIMATE OF QUANTITIES

| ITEM | UNIT | AMOUNT 22ND St. | 17TH-13TH St. | 7TH-2ND St. | 2ND-Preston | TOTAL |
|---|---|---|---|---|---|---|
| DECK OVERLAY | Cu. Yd. | 184.3 | 719.7 | 956.2 | 816.7 | 2,676.9 |
| BLAST CLEANING | Sq. Yd. | 5,307 | 20,728 | 27,538 | 23,523 | 77,096 |
| MACHINE PREPARE SLAB | Sq. Yd. | 1,161 | 918 | 590 | 9,611 | 12,280 |
| EPOXY SAND SLURRY | Batch | 28 | 116 | 153 | 102 | 399 |
| STEEL | Lbs. | 25,050 | 15,360 | 37,480 | 22,796 | 100,686 |
| RUMBLE STRIPS | Lin. Ft. | – | – | – | 1,750 | 1,750 |
| RAISED PVMT. MARKERS | Each | – | – | – | 146 | 146 |
| | | | 24,590 | 51,570 | 38,097 | 139,307 |

887.4

2747.6

BILL OF INCIDENTAL MATERIALS*

| ITEM | UNIT | AMOUNT 22nd St. | 17th-13th | 7th-2nd | 2nd-Preston | TOTAL |
|---|---|---|---|---|---|---|
| JOINT SEALING COMPOUND | Lin Ft. | 878 | 89 | 355 | 119 | 1,441 |

* Items incidental to 'Class 'AA' Concrete'

DECK OVERLAY - 22ND ST.

19238

SHEET NO 44

COMMONWEALTH OF KENTUCKY
BUREAU OF HIGHWAYS
FRANKFORT
COUNTY OF
JEFFERSON
LOUISVILLE-LEXINGTON
ROAD

44

STATION 267+00 | P. E. PROJECT NO. I64-2(92)

CONSTRUCTION PROJECT NO. | MAINTENANCE PROJECT NO. | DRAWING NO. 19238

UPDATE DATE
LETTING DATE

REVISED STEEL QUANTITIES
REVISED CONCRETE QUANTITIES
REVISED

DESIGNED BY JBW DATE 4-5-75
DETAILED BY SJR DATE 5-28-75
TRACED BY
CHECKED BY
CHECKED BY RHC DATE 11-75
CHECKED BY
CHECKED BY RHC DATE

LETTITG DATE

***SPECIFICATIONS:*** The Kentucky Department of Highways Standard Specifications for Road and Bridge Construction, current edition with revisions, shall apply to this project.

***DESIGN LOAD:*** These bridge alterations are designed for HS 20 loading as specified in 1973 AASHO Specifications or alternate loading of two 24-kip axles spaced four feet apart, whichever produces the greater stress. This bridge is designed for a wind load based on a wind velocity of 84 m.p.h.

***DESIGN STRESSES:*** For reinforced concrete use the following:

| Class A | Class AA |
|---|---|
| $f_s$ = 20,000 psi | $f_s$ = 20,000 psi |
| $f_c$ = 1,200 psi | $f_c$ = 1,600 psi for other than slabs |
| $f'_c$ = 3,000 psi | $f_c$ = 1,200 psi for deck slabs |
| u (for embed.) = 200 psi | $f'_c$ = 4,000 psi |
| u (for $\Sigma o$) = 300 psi | u (for embed.) = 200 psi |
| n = 10 | u (for $\Sigma o$) = 300 psi |
| | n = 8 |

Class D Concrete $f'_c$ = 3,000 psi

For Structural Steel use the following:

| | | |
|---|---|---|
| A36 | f = 20,000 psi | |
| A242 | Over 1-1/2" to 4" Incl. | $f_s$ = 23,000 |
| A242 | Over 3/4" to 1-1/2" Incl. | $f_s$ = 25,000 |
| A242 | 3/4" and under | $f_s$ = 27,000 |

***MATERIALS:*** ASTM Specifications, current edition, as designated below, shall govern materials furnished.

| | |
|---|---|
| A615-74a | Deformed Billet-Steel Bars for Concrete Reinforcement - Grade 60 |
| A616-72 | Rail-Steel Deformed Bars for Concrete Reinforcement - Grade 50 or 60 |
| A617-74 | Axle-Steel Deformed Bars for Concrete Reinforcement - Grade 60 |
| A36-74 | Structural Steel, 36,000 psi Minimum Yield |
| A242-74 | High Strength Low-Alloy Structural Steel |
| A325-74 | High Strength Bolts, Nuts and Washers |
| A307-74 | Carbon Steel Machine Bolts, Nuts and Tap Bolts |
| B29-55(1971) | Sheet Lead and Pig Lead |
| A108-73 | Stud Shear Connectors, Grade 1015 |
| A108-73 | Pintles, Grade 1016 to 1030 |

Welding Electrodes shall conform to the appropriate AWS Specifications.

***CONCRETE:*** Class "AA" concrete in accordance with the requirements of Special Provision No. 35, current edition, is to be used throughout the superstructure including parapet, and is to be used in the portions of the substructure above the bearing seats. Class "A" concrete is to be used in the substructure below the bearing seats, except in the concrete piles. Class "D" concrete is to be used in the concrete piles.

***SET RETARDING ADMIXTURE FOR CONCRETE:*** An approved admixture shall be added to the concrete for the bridge floor slabs to delay the initial set of the concrete so as to permit the placement and finishing of concrete in all spans in a single continuous operation for each unit. The admixture and its use shall conform to the requirements of Special Provision No. 36, current edition. The amount of delay will be dependent on the quantity of admixture and the quantity shall be carefully determined on the basis of temperature, relative humidity, wind conditions and required placing time. The retarding action shall delay the initial set in each span until after the next adjacent span in the bridge has been placed. The Contractor shall secure the Engineer's approval of the quantities of admixture to be used for each placement.

***SLAB FORMS:*** Stay-In-Place forms will not be permitted for concrete bridge floors.

***CONCRETE SURFACE FINISH:*** All concrete surfaces shall be finished according to the requirements of Special Provision No. 99, current edition.

***REINFORCEMENT:*** Dimensions shown from the face of concrete to bars are clear distances unless otherwise shown. Spacing of bars is from center to center of bars.

***BEVELED EDGES:*** All exposed edges shall be beveled 7/8" unless otherwise shown.

***DIMENSIONS:*** Dimensions are for a normal temperature of 60 degrees Fahrenheit. Layout dimensions are horizontal measurements. Dimensions and elevations shown are theoretical, based on original construction plans and may have to be adjusted in the field to match the existing structure. The Contractor shall verify dimensions with field measurements prior to ordering materials or fabricating structural steel.

***ANCHOR BOLT HOLES:*** Holes of depth and dimensions shown shall be drilled for anchor bolts, after base plates are properly set, by the superstructure contractor who shall be responsible for keeping holes dry in freezing weather. After base plates are properly set, anchor bolt holes drilled, and anchor bolts are placed in drilled holes, molten lead shall be poured in holes and packed until holes are completely filled flush to top of base plates. At the time of setting, anchor bolts are to be heated to a blue heat to assure free flow of lead to the bottom of the hole. The cost of drilling anchor bolt holes, furnishing lead, and filling holes with molten lead shall be incidental to and included in the lump sum bid for structural steel.

***PAYMENT FOR STRUCTURAL STEEL:*** The Lump Sum Bid for structural steel shall be full payment for all structural steel, bolts, washers, steel pins, lead plates, molten lead, welding and welding materials, paint and all labor and materials necessary to erect the steel in accordance with the Plans and Specifications. The approximate weight of structural steel shown in the Estimate of Quantities does not include overrun or weld material.

***CONNECTIONS:*** Unless otherwise provided on the plans, all connections shall be 7/8" diameter high strength bolts. Open holes shall be 15/16" diameter. All joints are designed as friction-type connections. Tightening shall be done with properly calibrated wrenches.

***CAMBER:*** The beams of spans composed of wideflange members shall be cambered to mid-ordinates specified on the plans. If these beams do not conform to plan camber for the erected position, either an adjustment in depth of concrete haunch over the supporting members, or a reworking of the beam camber to meet plan camber and slab thickness will be required. If either type of adjustment is required, there will be no additional cost to the state. However, in no case shall the shear connectors be allowed to penetrate the slab less than two inches. Girder web plates shall be cut to provide for the camber of the girder. Provide for possible warpage due to extra heat in top flange by virtue of shear connectors. Girders which do not conform to plan camber and grade in the erected position shall be considered as requiring, at no additional cost to the state, either an adjustment in depth of the concrete slab haunch over the steel supporting members or a reworking of the girder camber to meet the plan grade and slab thickness. However, in no case shall the shear connectors be allowed to penetrate the slab less than two inches.

***MILL TEST REPORTS:*** Notarized Mill test Reports shall be furnished in triplicate to the Department in accordance with Article 408.3.1 L4 of the Standard Specifications.

***WELDING:*** All welding shall conform to AWS D2.0-69 "Specifications for Welded Highway and Railway Bridges", 8th Edition, of the American Welding Society with modifications and additions as stated on the Plans and Special Provision No. 101, current edition and the 1970 revision of AWS D2.0-69.

***WELDING PROCEDURE:*** Qualification tests of all welding procedures shall be completed by the Contractor and approved by the Engineer prior to the final approval of the shop drawings and Welding Procedure and the start of the fabrication.

***STUD WELDING:*** Studs shall be welded with approved welding equipment.

***CLEANING AND PAINTING:*** Special Provision 80, current edition, applies to this project and contractors are hereby reminded that in accordance with the special provision ALL steel surfaces to be painted, including exposed surfaces of splice plates, shall be blast cleaned to a near-white condition in accordance with SSPC-SP10 immediately prior to being painted with the first coat of paint, regardless of whether the first coat is applied in the shop or in the field.

***PAINTING BURNT AREAS:*** Areas of new or existing structural steel on which paint has been damaged with weld burns or other means shall be cleaned and spot painted in accordance with the procedure for painting new structural steel. The cost of this touch-up painting is to be included in the lump sum bid for structural steel.

***CLEANING EXISTING STEEL:*** Areas of existing steel that are to be in contact with new steel, including areas under bolt heads, shall be cleaned of dirt, rust, paint, and other foreign matter, before installing the new steel. The cost of this cleaning is to be included in the lump sum bid for structural steel.

***OPTIONAL TYPES OF SHEAR CONNECTORS:***

(a) The Contractor shall use one of the following options throughout this structure.

Option 1 - 3/4" x 4" studs

Option 2 - 4" channel @ 5.4#

(b) If the Contractor wishes to use other than 3/4" x 4" stud shear connectors shown on the plans, the proposed arrangement shall be submitted for approval with the shop plans.

***PAYMENT FOR SHEAR CONNECTORS:*** "The Lump Sum Bid" for shear connectors shall be full payment for all shear connectors, welding and welding material, and materials necessary to field weld or shop weld the shear connectors in place according to the plans and specifications.

***SLOPE PROTECTION:*** Slope protection shall be 4" concrete slopewall in accordance with Standard Drawing BGX-004, current edition.

***EXPANSION JOINT SEALING MATERIAL:*** See Special Provision No. 12, current edition, for requirements of joint sealing compound. The cost of this item is to be included in the unit price bid for Deck Overlay.

***END BENT EXCAVATION AND BACKFILL:*** See Standard Drawing BGB-001, BGB-002, and BGB-003, current edition.

***BLASTING:*** Blasting will not be allowed for removing existing concrete or excavation for new construction.

***BURIED ELECTRICAL WIRES:*** The exact location of electrical wires for expressway lighting is not known. Work being done in locations where such wiring might exist should be done with caution to prevent serious accidents.

***EXISTING SLOPE PAVING:*** Existing slope paving shall be removed, in areas Approved by the Engineer, where necessary for making structure excavation. The cost of this removal shall be included in the lump sum bid for "Removal of Existing Reinforced Concrete." Replacement in the areas mentioned above shall be 4" concrete slopewall and shall be paid for at the unit price bid for "Slope Protection". The Contractor shall exercise care to prevent damaging the existing slope paving in other areas and shall replace, entirely at his own expense, any areas damaged by careless operations.

***FENCE:*** Existing fence at bridge ends is to be carefully removed and stored during construction. After new piers have been completed, the fence is to be replaced as directed by the engineer. The cost of this work is to be incidental to the project and no direct payment will be made.

***ITEMS DAMAGED OR REMOVED:*** Any items (sidewalks, curbs, etc) damaged or removed to facilitate construction shall be replaced to original condition, as approved by the Engineer, by the Contractor. The cost of this work is to be incidental to the project and no direct payment will be made.

***UTILITY LINES:*** The owners of utility lines shall be responsible for these lines and shall relocate the lines as shown on the plans or as directed by the Engineer. The Contractor shall cooperate with the utility owners during the construction work.

***EXISTING UTILITIES:*** The Contractor is advised to exercise extreme caution in his operations in areas where plans indicate the presence of a gas line or other lines carrying hazardous material. The Contractor shall use all possible care in driving the piling and constructing the foundations in order that the existing utilities shall not be disturbed. Any utility disturbed or damaged by the Contractor's operations shall be replaced or repaired by the Contractor. Any replacement or repair necessary shall be at the Contractor's expense with no extra cost to the Department and such work shall include excavation, sheeting, materials, labor and all incidentals necessary to complete the work to the satisfaction of the Engineer.

***EXISTING REINFORCING STEEL:*** Where indicated on the plans the existing reinforcing steel shall be exposed and cleaned of concrete, excessive rust, and other foreign matter. It shall be straightened and bent to lap, as indicated on the plans, with the new bars. Laps in excess of 40 bar diameters are not required and the excess may be cut off. The cost of cutting, bending, and cleaning existing reinforcing steel is to be included in the lump sum bid for "Removal of Existing Reinforced Concrete."

***BONDING NEW CONCRETE TO OLD CONCRETE:*** All new concrete shall be bonded to the old concrete where noted on the plans with a two-component epoxy resin conforming to Special Provision No. 73, current edition, (Epoxy Grout and Bond Coat). The cost of this work, including all labor, tools, and materials is to be included in the unit price bid for the class of concrete being bonded.

***DRILLING HOLES IN CONCRETE:*** The cost of drilling holes in existing concrete and grouting dowel bars is to be included in the unit price bid for the class of concrete adjacent to the dowel bars. This work is to be performed in accordance with Special Provision No. 73, current edition.

***DAMAGE TO THE STRUCTURE:*** The Contractor is responsible for any and all damage to the structure during reconstruction, even to the replacement of the entire structure and removal of the fallen structure at his expense, should it be allowed to fall for any cause whatsoever.

***ELEVATION DATUM:*** The Contractor shall establish an elevation bench mark in a convenient location that will not be disturbed by the construction. It shall be durable and adequately identified as to be useful for the entire duration of the project. The elevation shall be based on the values shown on these plans for the bearing seats of the existing structure. The end bearing seat from each existing end bent and pier shall be considered before assigning the elevation. The bench mark shall be acceptable to the Engineer and its location and elevation and the measurements used to establish the elevation furnished to him in writing.

***ALIGNMENT, STATIONING, PROFILE, AND CROSS SLOPE:*** Centerline alignment, bridge stationing, profile grade, and cross slope data shown on these plans is theoretical and based on original construction plans. New construction shall be adjusted as required to match the existing structure as shown.

***REMOVAL OF EXISTING REINFORCED CONCRETE:*** This work includes removing portions of reinforced concrete in wing walls, wing wall footings, end bents and bridge floor slabs, curbs. Concrete removal shall be done in such a manner that the edges of the remaining concrete shall be as square and straight as possible. Feather edges of remaining concrete or new concrete will not be allowed. Where called for on the plans or where directed by the Engineer saw cuts shall be made in the existing concrete to aid in securing square and straight edges. No additional payment will be made for saw cuts. Proper care shall be taken to protect and leave exposed existing reinforcing steel at locations indicated on the plans. Waste shall be removed from the Right of Way and disposed of in a place acceptable to the Engineer. This work shall be paid for at the contract lump sum bid for "Removal of Existing Reinforced Concrete" which payment shall be full compensation for removal and disposal of reinforced concrete and accessory items and all labor, equipment, tools, and incidentals necessary to complete the work.

***CONTINUOUS STEEL GIRDERS - NEW CONSTRUCTION:*** The longitudinal steel girders are designed as continuous spans between the pier girders for steel dead load, as continuous steel girders under weight of the concrete slab, and as continuous girders composite in positive moment for live load and the weights of curbs, plinth, railing, future wearing surface, etc.

***STRUCTURAL STEEL:*** All new structural steel shall be ASTM A36, except where indicated. All the flange and web material supplied for the longitudinal plate girders, shall meet the longitudinal Charpy V-notch toughness test, applicable to Group 2 minimum service temperature from minus 1° F, to minus 30° F, in accordance with the following listing: For A36 steel (up to 4") - 15 ft. lbs. @ 40° F. Sampling and testing procedures shall be in accordance with ASTM A673, current edition, utilizing (H) frequency testing.

***SHOP ASSEMBLY:*** General reaming of holes for each bolted splice connection of each longitudinal girder line shall be required. Each continuous longitudinal girder unit shall be progressively shop assembled with at least three contiguous shop sections adjusted to line, elevations, camber and fit for drilling or reaming. At least one shop section shall be added at the advancing end of the assembly before any shop section is removed from the rearward end so that the assembled portion of the structure is never less than three contiguous shop sections. Other major bolted connections to the longitudinal girders shall be drilled or reamed in the shop with connecting parts assembled or shall be reamed to metal template without assembly. Girder Sections shall remain assembled for inspection by the Bureau of Highways Inspector and are to be matchmarked while assembled. Connections for the cross frames, diaphrams, expansion joints and other minor members may be punched or drilled full size without assembly subject to the requirements in the specifications for general reaming.

DATE REVISED DATE REVISED DATE REVISED

DATE CHECKED BY DATE CHECKED BY DATE CHECKED BY

DESIGNED BY DETAILED BY TRACED BY

SHEET 2

# GENERAL NOTES

**COMMONWEALTH OF KENTUCKY**
BUREAU OF HIGHWAYS
**FRANKFORT**
**COUNTY OF**
**JEFFERSON**
**LOUISVILLE-LEXINGTON**
**ROAD**

**STATION** 267+00 **P. E. PROJECT NO.** 164-2(92)

| CONSTRUCTION PROJECT NO. | MAINTENANCE PROJECT NO. | DRAWING NO. |
|---|---|---|
| | | 19238 |

UPDATE DATE _____
LETTING DATE _____

***STRUCTURAL STEEL ERECTION:*** The existing girder "G" is designed as simple spans between the pier girders for steel dead load, as a continuous steel girder under weight of the concrete slab, and as a continuous girder composite in positive moment for live load and the weights at curb, plinth, railing, future wearing surface, etc. Where girder "G" is continuous thru the pier girder the flanges are designed to take the entire moment and the web the entire shear.

In all cases where girder "G" is disconnected from the pier girders, girder "G" must be jacked in such a manner as to remove the load from the connecting bolts. It is anticipated that in order to accomplish the above, girder "G" will have to be jacked at the pier girder and in some cases the adjacent spans. At all jacking points, provisions for jacking against the girder shall be provided.

The jacking procedure and details for reinforcing the girder at the jacking point must be approved by the Engineer prior to jacking.

***FIELD WELDING ON EXISTING STRUCTURE:*** All field welding on existing structure should be indicated on the Shop Drawings along with the method of support where necessary. No other welding of any nature will be premitted on the load carrying members of the bridge without written consent of the Director, Division of Bridges, or his authorized representative, and then only in the manner and at the locations designated in the authorization.

***FOUNDATION PILE LOADS:*** Piles are designed for a maximum load of 60 tons per pile. This maximum is for Group 1 loads with increases allowed for other loading groups in accordance with AASHO Article 1.2.22 current edition. This load and the pile loads for End Bent 101E are the same as for the existing structure.

***TYPES OF PILES:*** The Contractor shall use 14" Cast-In-Place Concrete Piles Standard Drawing BPC-005-01.

***PILING:*** Piling shall be driven to the maximum tip elevation (minimum penetration) shown on the Pile Record Sheet and determined from driving records for the existing structure, but the driving resistance for the last foot of penetration shall be not less than that required by the Specifications for a 75 ton load.

***DRIVING PILES FOR END BENT:*** Cored pilot holes thru the end bent embankment will be required for starting piles. The cost of this work is to be included in the unit bid per linear foot for driving piles.

△

***EXISTING APPURTENANCE:*** Existing ~~Aluminum Bridge Railing,~~ Light Standards and Luminairs shall be removed without damage, preserved and salvaged for reuse on the new plinth. All anchor bolts for the above relocated items shall be new.

***SHOP DRAWINGS:*** Complete shop drawings in accordance with Article 408.3.1A.1 of the Standard Specifications shall be submitted to the Bridge Engineer for approval.

***SHEETING FOR STRUCTURE EXCAVATION:*** Steel sheet piling to retain the earth is required at Pier 125A, 129A and 129B footing excavation. The cost of materials and labor is to be incidental to and included in the unit price bid for "Structure Excavation, Common."

***CLEARANCE:*** All falsework, bracing or forms shall have a minimum vertical clearance of 20 feet above the top of the highest rail, and a minimum horizontal clearance of 8 feet measured perpendicular to the centerline of the nearest track.

***CONSTRUCTION NOTE:*** The bridge being widened is over Louisville and Nashville Railroad Company tracks. The Contractor shall arrange to do the work without any interference to the operation of the Louisville and Nashville Railroad Company tracks at any time unless the Contractor has made arrangements with the Railroad Company. The Contractor shall arrange with the Railroad Company to provide flag protection at the Contractor's expense. Plans for any temporary supports adjacent to or over a railroad track shall be submitted to the Bureau of Highways and the Railroad Company for approval. The Contractor's attention is referred to Article 1.7.15 and 1.7.18 of the Specifications.

***TEMPORARY SUPPORTS:*** Temporary supports or shoring will not be permitted under girders when pouring the concrete floor slab or when taking "Top of Beam" elevations.

***DRAIN DETAILS:*** Foundry Note - All drains shall be gray iron castings, ASTM A48, current edition, Class 30A. Report of Field Inspection of Castings, current form, shall be submitted to the Division of Materials

The drain pipe shall be 6" standard weight in accordance with Article 411.3.5 of the Specifications.

Lump sum bid for "Deck Drainage" shall be full payment for the new drain casting, relocating the existing drain casting, all necessary 6" pipe and materials including weld material and welding, brackets, pipe clamps and hangers, fittings, connections, hardware, tools, paint and painting equipment, labor and all incidentals necessary to complete the work as shown on the drain details for deck drains and expansion dams.

***CURING DECK CONCRETE:*** The deck concrete shall be cured as described in Article 403.3.7 of the Standard Specifications, except earth or straw shall not be used. Membrane Curing Compound will not be allowed.

***INCIDENTAL MATERIAL:*** Quantities shown in Bill of Incidental Material are approximate only and the Contractor is responsible for furnishing enough material to complete the work in accordance with the Plans and Specifications.

***ALTERNATE TYPES OF CONCRETE OVERLAY:*** The Contractor shall use, at his option, one of the following alternates throughout the project.

Alternate A - Concrete Overlay, Latex, in accordance with Special Provision No. 108, current edition.

Alternate B - Concrete Overlay, Portland Cement, in accordance with Special Provision No. 112, current edition.

SAFETY NETS: Safety nets will be required during superstructure construction. The nets shall conform to the Occupational Safety and Health Act requirements.

SURFACE FINISH OF CLASS "AA" CONCRETE IN THE BRIDGE DECK: The deck of the new structure is to receive an overlay, therefore, the burlap drag finish specified by Article 411.3.3-H.5. of the Standard Specifications for Road and Bridge Construction, 1965 Edition, is eliminated, nor will any surface texturing beyond 10-ft. straightedge (Article 411.3.3-H.4.) be permitted.

The contractor is cautioned that the proposed deck overlays are very sensitive to oils, grease, paints, waxes and similar substances and if these substances are deposited on the deck, he will be responsible for their complete removal which may include removal and replacement of the affected concrete to the depth the substances have penetrated. Any expense of this removal will be borne by the Contractor.

CURING OF CLASS "AA" CONCRETE IN THE BRIDGE DECK: The deck of the new structure is to receive an overlay, therefore, membrane curing as specified in Special Provision No. 30-B is not to be applied to the bridge deck. The concrete deck, including portions of the curbs and/or barrier walls designated, must be cured in conformity with Article 403.3.7 of the Standard Specifications for Road and Bridge Construction, 1965 Edition, with the following additional requirements:

1. No curing compound, Styrene Butadiene, linseed oil, masonry coating, form oil or similar substances will be permitted on the Class "AA" Concrete deck surface nor for 6" vertically above the Class "AA" Concrete gutter line of the interior faces of curbs.

2. As soon after final finish of the concrete as possible one thickness of pre-wetted burlap must be applied and kept moist by a fog spray application of water. This one thickness of burlap must be followed, as soon as is possible, without damaging the surface of the concrete, with an additional layer of wet burlap, cotton mats, etc., as required by Article 403.3.7.

3. The required initial layer of burlap shall be pre-wetted by complete saturation with water except that it shall be squeezed free of excess water that will damage the concrete surface by dripping. The pre-wetted burlap must be applied from work bridges and walkways in a manner that will preclude workmen or tools damaging the fresh concrete surface. The pre-wetted burlap must be applied in a manner that will prevent it from being dragged, untangled, or unrolled on the fresh concrete surface and damaging it.

△ Indicates Revision for GM Barrier

| | | | |
|---|---|---|---|
| DESIGNED BY | CHECKED BY | DATE | REVISED |
| DETAILED BY | CHECKED BY | DATE | REVISED |
| TRACED BY | CHECKED BY | DATE | REVISED |

DATE 7/75

SHEET 2A

GENERAL NOTES

**COMMONWEALTH OF KENTUCKY**
BUREAU OF HIGHWAYS
**FRANKFORT**
**COUNTY OF**
# JEFFERSON
LOUISVILLE-LEXINGTON
**ROAD**

**STATION** 267+00 **P. E. PROJECT NO.** I64-2(92)

| CONSTRUCTION PROJECT NO. | MAINTENANCE PROJECT NO. | DRAWING NO. |
|---|---|---|
| | | 19238 |

UPDATE DATE
LETTING DATE

BEGIN PROJECT @ 260+33

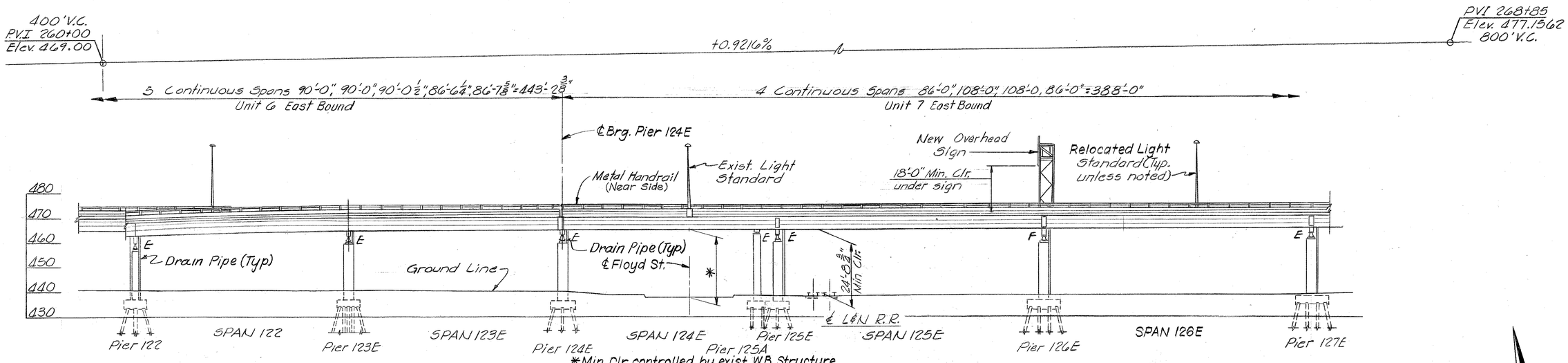


ELEVATION

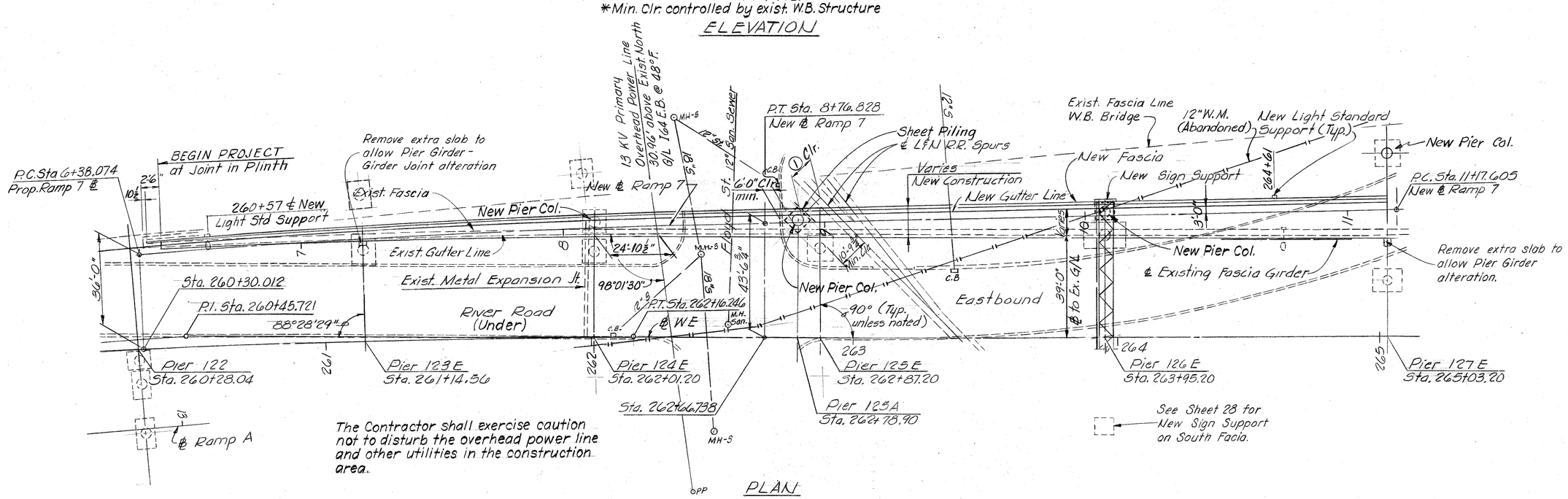


PLAN

The Contractor shall exercise caution not to disturb the overhead power line and other utilities in the construction area.

## CURVE DATA

| ℄ WE | New ℄ Ramp 7 |
|---|---|
| P.I. = 260+45.721 | P.I. = 7+57.488 |
| Δ = 5°07'09" Rt. | Δ = 3°30'49.9 Rt. |
| D = 1°30' | D = 1°28'18.3" |
| L = 341.278' | L = 238.753' |
| R = 3819.719' | R = 3893.029' |
| T = 170.752' | T = 119.414' |

See Sheet 8 for Horizontal Alignment Detail

Designed for HS20A loading. New construction of superstructure and substructure is to alter bridge for the addition of New Ramps 7 and 5. For original Bridge Plans see Dwg. № 15754. Elevations, dimensions, ℄ WE & stationing are from original Bridge Plans and are not field measurements.

① 8'-6" plus allowance for overhang and tilt on curves (85' car, 60' between trucks and 14' high.)

Approx. length of project = 892'

LAYOUT

Sheet 3

**COMMONWEALTH OF KENTUCKY**
BUREAU OF HIGHWAYS
FRANKFORT
COUNTY OF
**JEFFERSON**
**LOUISVILLE-LEXINGTON**
ROAD

STATION 267+00 — P. E. PROJECT NO. I64-2(92)

| CONSTRUCTION PROJECT NO. | MAINTENANCE PROJECT NO. | DRAWING NO. |
|---|---|---|
| | | 19238 |

DESIGNED BY: RHMc — CHECKED BY: — DATE — REVISED
DETAILED BY: — CHECKED BY: — DATE 4/74 — REVISED
TRACED BY: — CHECKED BY: — DATE — REVISED

UPDATE DATE
LETTING DATE

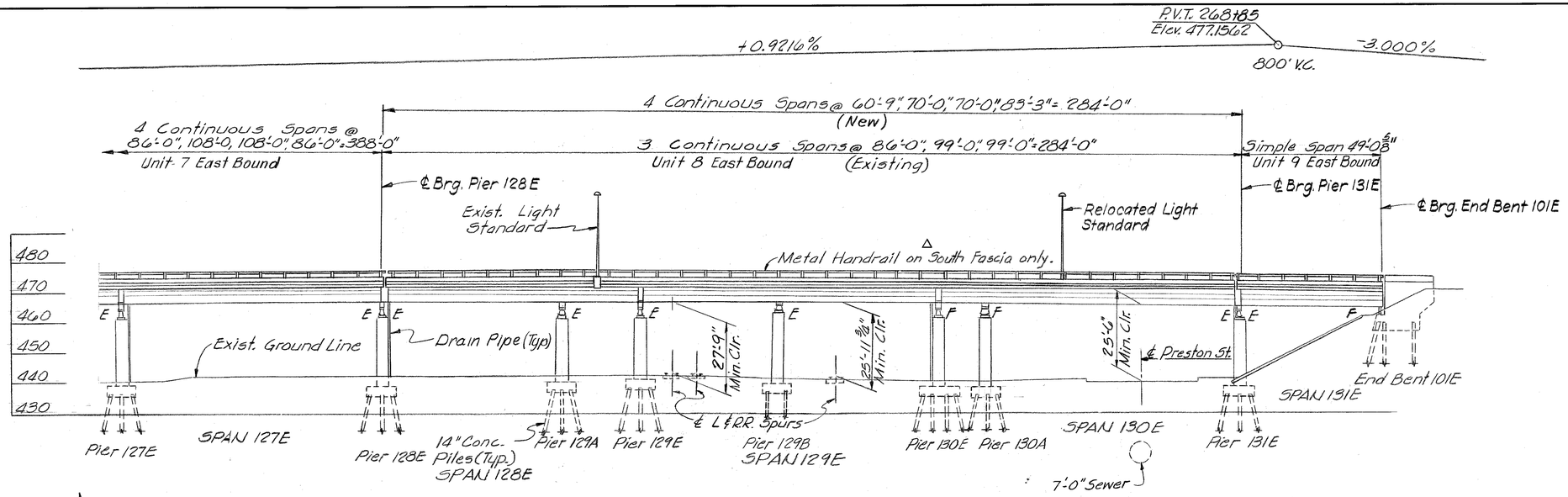


ELEVATION

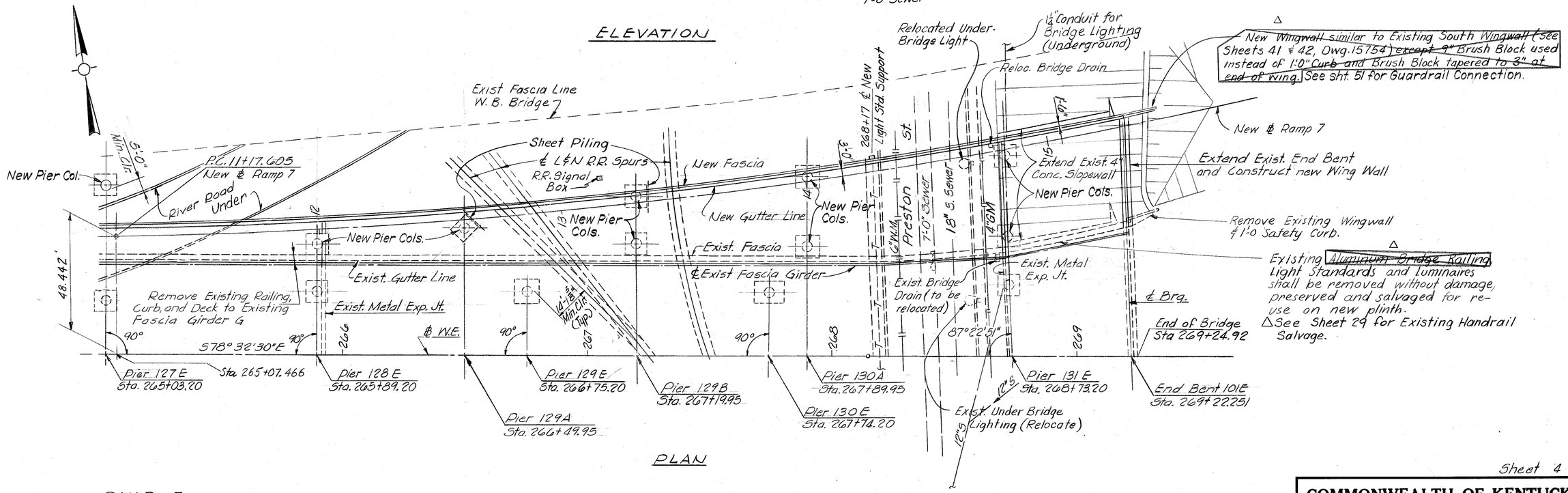


PLAN

RAMP 7
CURVE DATA

P.I. = 14+25.204
Δ = 15°17'19.1" Lt.
D = 2°30'
R = 2291.83'
L = 611.54'
T = 307.60'

LAYOUT

Sheet 4

**COMMONWEALTH OF KENTUCKY**
BUREAU OF HIGHWAYS
FRANKFORT
COUNTY OF
**JEFFERSON**
**LOUISVILLE-LEXINGTON**
ROAD

STATION 267+00 — P. E. PROJECT NO. 164-2(92)

| CONSTRUCTION PROJECT NO. | MAINTENANCE PROJECT NO. | DRAWING NO. |
|---|---|---|
| | | 19238 |

DESIGNED BY RHMG — CHECKED BY — DATE 7/75
DETAILED BY EW — CHECKED BY — DATE 4/74
TRACED BY — CHECKED BY — DATE
REVISED — REVISED — REVISED
Δ Indicates Revision For G.M. Barrier

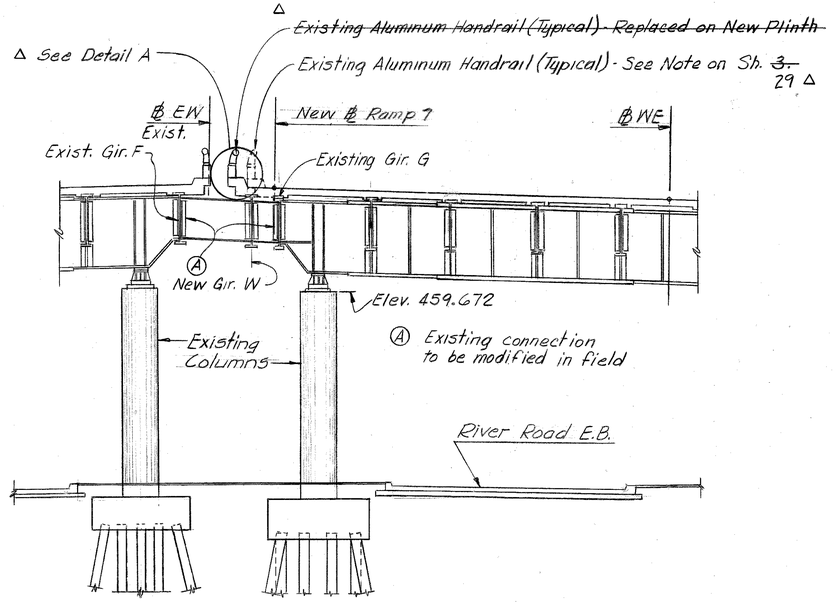


SECTION @ PIERS 123 E & W

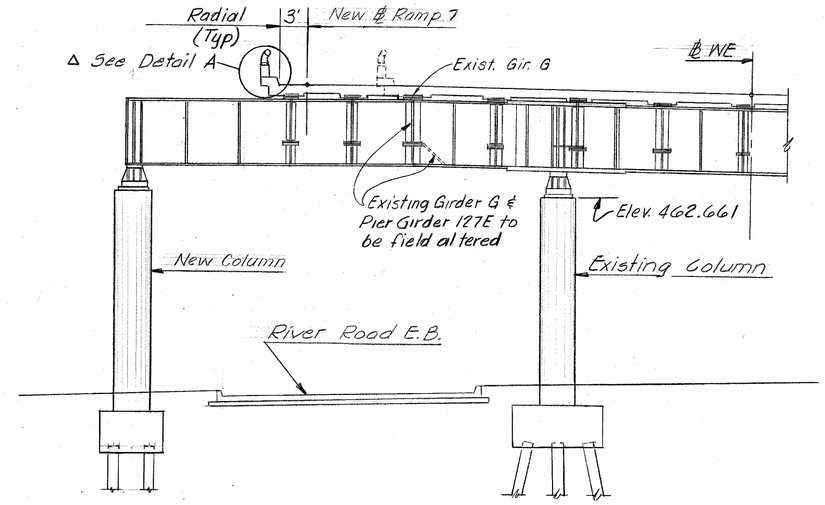


SECTION @ PIER 127E

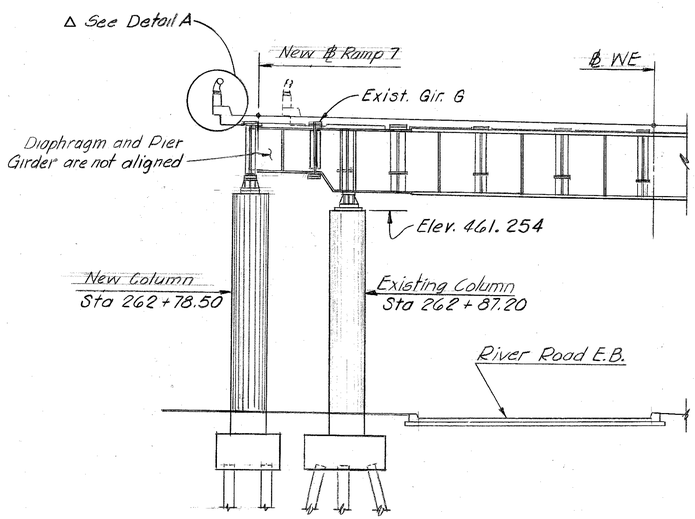


SECTION @ PIER 125E

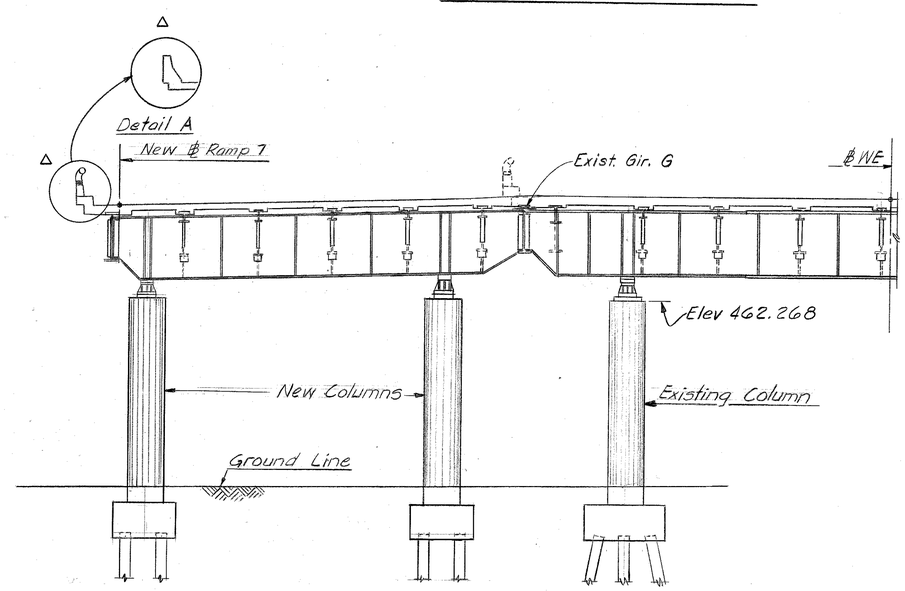


SECTION @ PIER 131E

TYPICAL SECTIONS

Sheet 5

**COMMONWEALTH OF KENTUCKY**
BUREAU OF HIGHWAYS
FRANKFORT
COUNTY OF
**JEFFERSON**
**LOUISVILLE-LEXINGTON**
ROAD

STATION 267+00 | P.E. PROJECT NO. I64-2(92)

| CONSTRUCTION PROJECT NO. | MAINTENANCE PROJECT NO. | DRAWING NO. |
|---|---|---|
| | | 19238 |

UPDATE DATE
LETTING DATE

△ Indicates Revision for G.M. Barrier

DESIGNED BY RHMC CHECKED BY ELW DATE 3/74 REVISED DATE 7/85
DETAILED BY CHECKED BY DATE REVISED DATE
TRACED BY CHECKED BY DATE REVISED DATE

UPDATE DATE
LETTING DATE

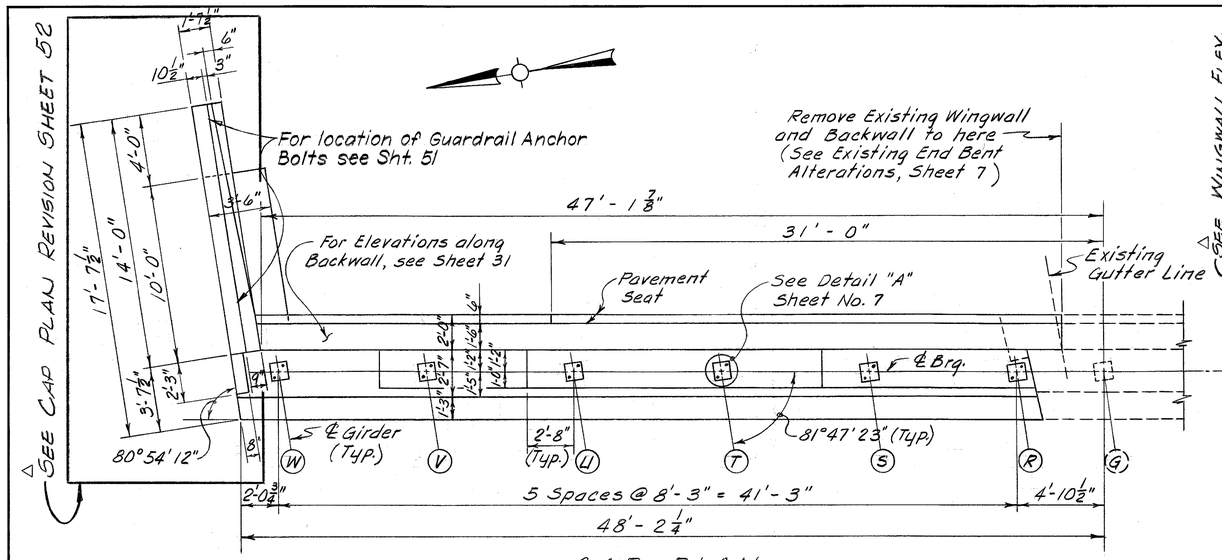


CAP PLAN

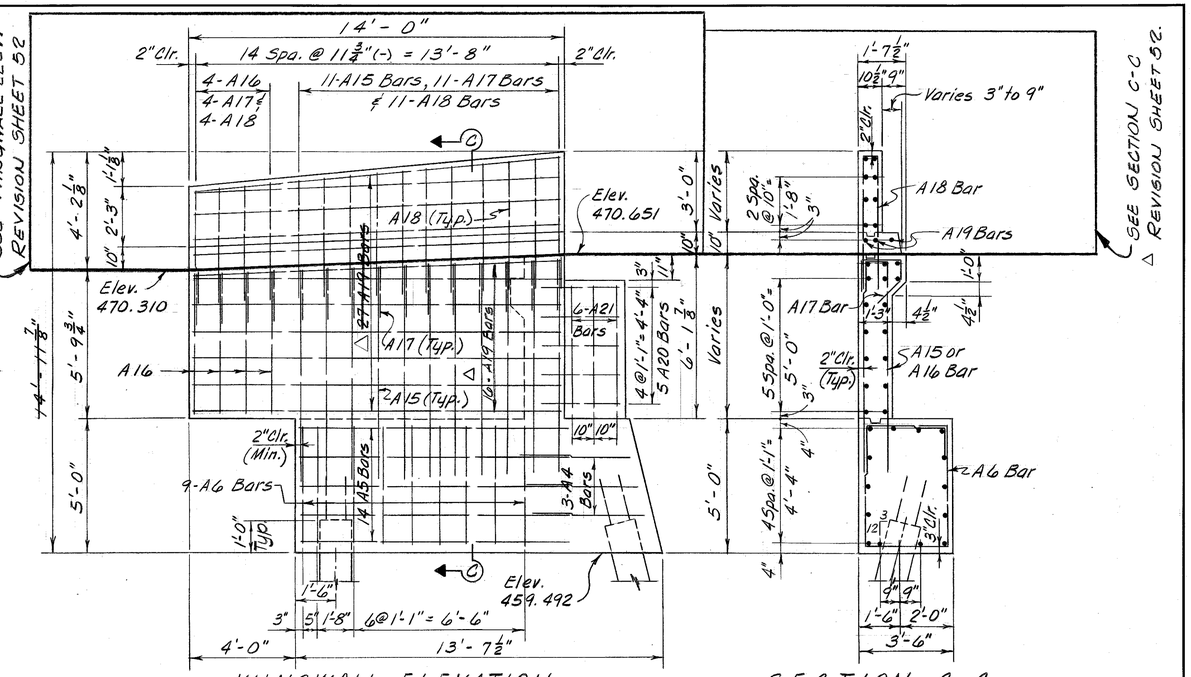


WINGWALL ELEVATION

SECTION C-C

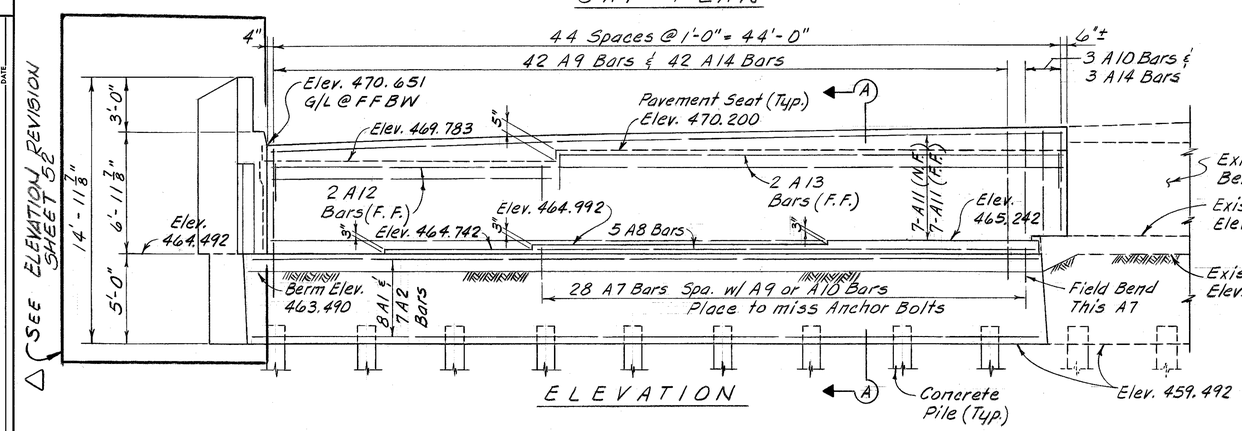


ELEVATION

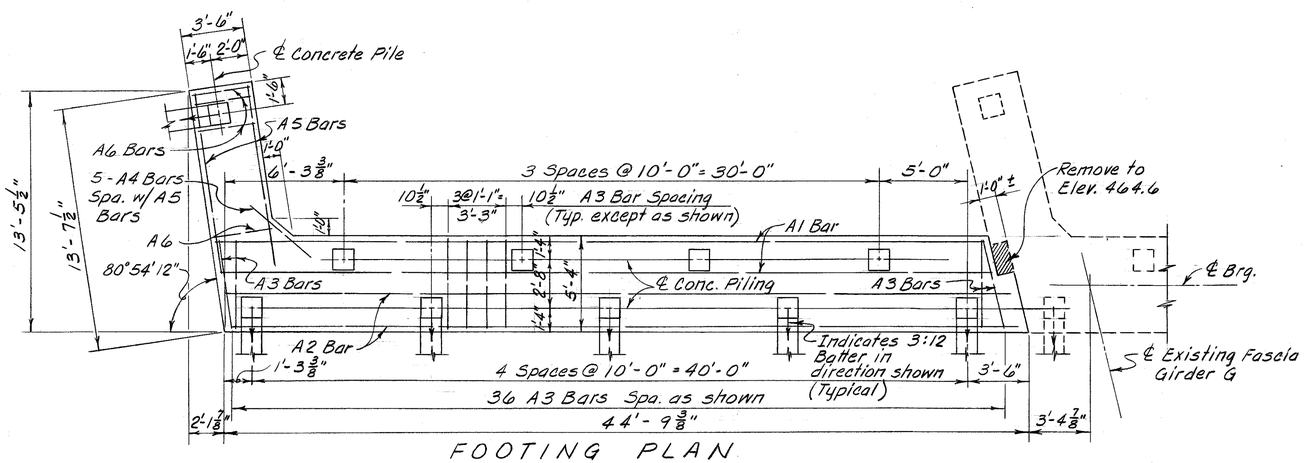


FOOTING PLAN

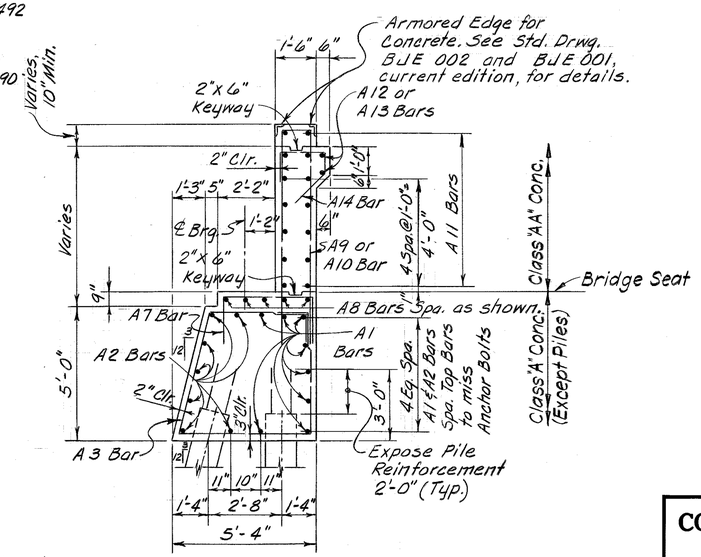


SECTION A-A

END BENT 101 E

SHEET 6

**COMMONWEALTH OF KENTUCKY**
BUREAU OF HIGHWAYS
FRANKFORT
COUNTY OF
**JEFFERSON**
**LOUISVILLE-LEXINGTON**
ROAD
STATION 267+00 — P. E. PROJECT NO. I64-2(92)

| CONSTRUCTION PROJECT NO. | MAINTENANCE PROJECT NO. | DRAWING NO. |
|---|---|---|
| | | 19238 |

| | | | |
|---|---|---|---|
| DESIGNED BY: P.B.S. | CHECKED BY: P.M.E. | DATE 4-75 | REVISED △ Indicates Revision For G.M. Barrier DATE 7/75 |
| DETAILED BY: E.L.U. | CHECKED BY: | DATE 4-75 | REVISED DATE |
| TRACED BY: | CHECKED BY: | DATE | REVISED DATE |

UPDATE DATE
LETTING DATE

| BILL OF REINFORCEMENT | | | | | | |
|---|---|---|---|---|---|---|
| MARK | SIZE | TYPE | Nº | LENGTH Ft. | LENGTH In. | LOCATION |
| D1 | 8 | Str. | 12 | 2 | 6 | Footing |
| A1 | 6 | Str. | 8 | 42 | 7 | |
| A2 | 6 | Str. | 7 | 43 | 9 | |
| A3 | 5 | 1 | 36 | 18 | 9 | |
| A4 | 5 | Str. | 8 | 4 | 6 | |
| A5 | 5 | Str. | 14 | 10 | 0 | |
| A6 | 5 | 2 | 9 | 16 | 3 | Footing |
| A7 | 4 | 3 | 28 | 5 | 11 | Riser |
| A8 | 4 | Str. | 5 | 27 | 6 | Riser |
| A9 | 6 | 3 | 42 | 18 | 9 | Backwall |
| A10 | 6 | 3 | 3 | 14 | 3 | |
| A11 | 4 | Str. | 14 | 45 | 6 | |
| A12 | 4 | Str. | 2 | 16 | 0 | |
| A13 | 4 | Str. | 2 | 28 | 0 | |
| A14 | 6 | 4 | 45 | 5 | 0 | Backwall |
| A15 | 5 | 3 | 11 | 15 | 8 | Wingwall |
| A16 | 5 | 3 | 4 | 11 | 4 | |
| A17 | 4 | 4 | 15 | 4 | 4 | |
| △ A18 | 4 | 3 Str. | 20 | ~~2~~ | X6 | |
| △ A19 | 4 | Str. | ~~20~~ 27 | 13 | 9 | Wingwall |
| A20 | 4 | 3 | 5 | 6 | 7 | Stubwall |
| A21 | 4 | Str. | 6 | 4 | 8 | Stubwall |

NOTE:
Preformed Compression Joint Seal extends diagonally up ~~to top of curb~~ △ at Fascia. See Std. Dwg. BJJ 003 current edition.

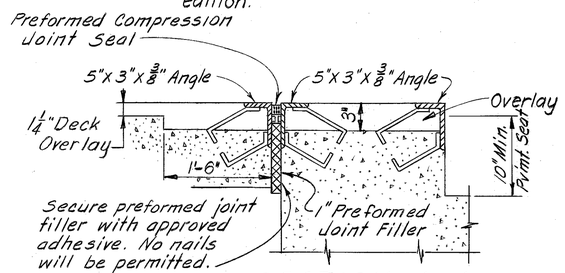


SECTION A - A
(See Std. Dwgs. BJE 001 & BJE 002 current edition)

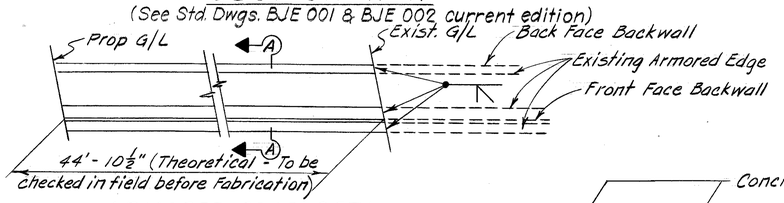


ARMORED EDGE DETAILS

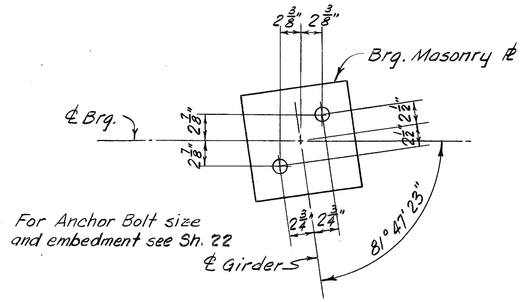


DETAIL "A"

| ESTIMATE OF QUANTITIES | | | |
|---|---|---|---|
| ITEM | UNIT | AMOUNT | |
| Concrete, Class A | Cu. Yds. | 46.6 | |
| △ Concrete, Class AA | Cu. Yds. | ~~22.4~~ | 22.6 |
| △ Steel Reinforcement | Lbs. | ~~5015~~ | 5029 |
| Structure Excavation Common △ | Cu. Yds. | 250 | |
| Piles-14" Cast In Place-Furnished | Lin. Ft. | 606 | |
| Piles-14" Cast In Place-Driven | Lin. Ft. | 606 | |
| End Bent Backfill △ | Cu. Yds. | 155 | |
| Preformed Comp. Joint Seal △ | Lin. Ft. | 47 | |
| Preformed Joint Filler △ | Sq. Ft | 24 | |
| 4" Concrete Slope Protection | Sq. Yd. | 285 | |

△ Paid for as "End Bent Backfill, Lump Sum"
△ Incidental to "Deck Overlay, Cu. Yds"
△ Incidental to "Concrete Class "A A" Cu. Yds"

| | |
|---|---|
| 4" | A20 |
| 3'-4" | A7 |
| 1'-2" | A9 |
| 1'-2" | A10 |
| 11" | A15 |
| 11" | A16 |
| ~~10 1/2"~~ | ~~A18~~ |

△ △

| A7 | A9 | A10 | A15 | A16 | ~~A18~~ | A20 |
|---|---|---|---|---|---|---|
| 1'-4" | 8'-10" | 6'-7" | 7'-5" | 5'-3" | ~~2'-4"~~ | 3'-2" |

TYPE 3

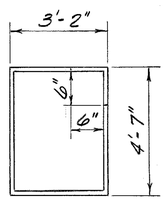


TYPE 2

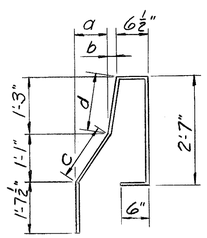


△ TYPE 5

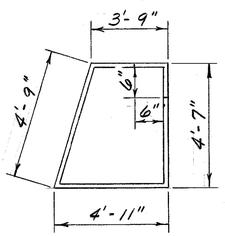


TYPE 1

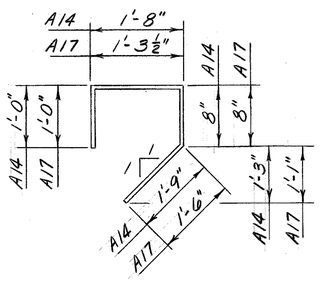


TYPE 4

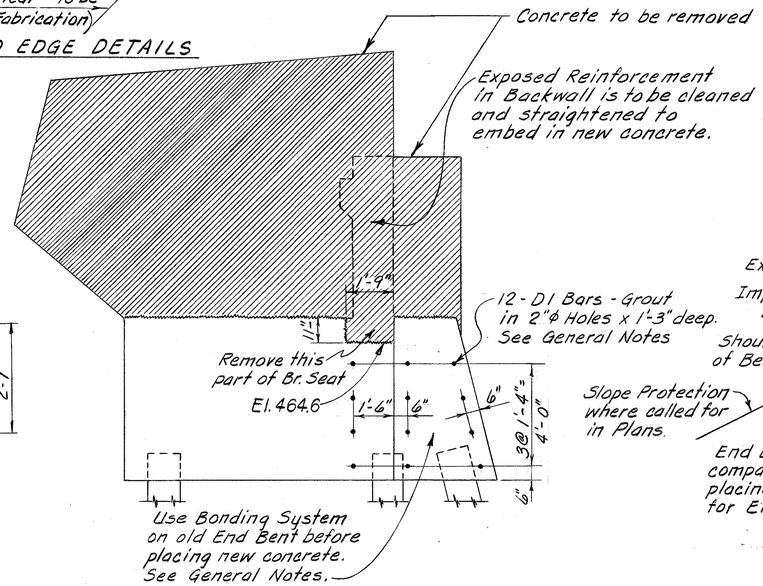


EXISTING END BENT ALTERATIONS

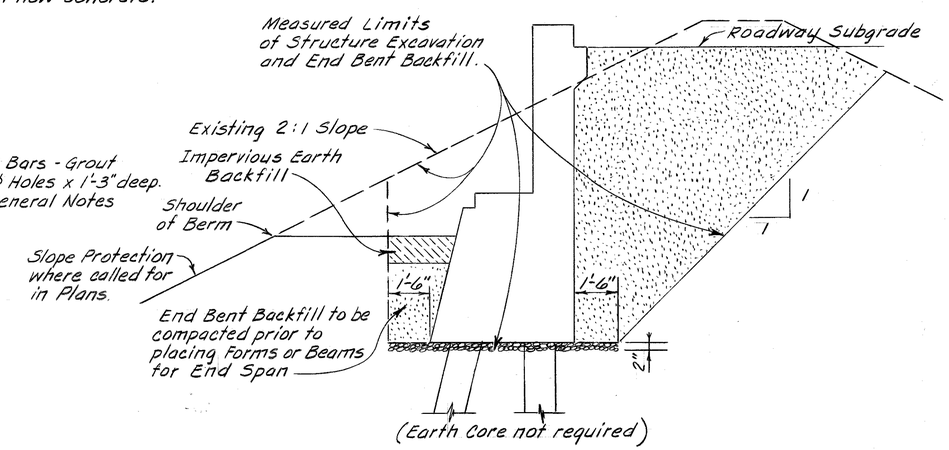


EXCAVATION DETAILS

For Notes and Details not shown, see Standard Drawings BGB-001, BGB-002 and BGB-003, current edition.

△4

| BILL OF REINFORCEMENT | | | | | | | | | | | | | | |
|---|---|---|---|---|---|---|---|---|---|---|---|---|---|---|
| MARK | SIZE | TYPE | Nº | a Ft. | a In. | b Ft. | b In. | c Ft. | c In. | d Ft. | d In. | LENGTH Ft. | LENGTH In. | LOCATION |
| A22 | 5 | 5 | 5 | 0 | 0 | 0 | 0 | 1 | 1 | 1 | 3 | 7 | 5 | Wingwall |
| A23 | 5 | 5 | 5 | 0 | 3 | 0 | 1 | 1 | 1 1/4 | 1 | 3 | 7 | 6 | Wingwall |
| A24 | 5 | 5 | 5 | 0 | 6 | 0 | 2 | 1 | 2 1/4 | 1 | 3 | 7 | 7 | Wingwall |

END BENT 101 E

△ Indicates Revision For G.M. Barrier

| | | | |
|---|---|---|---|
| DESIGNED BY RBS | CHECKED BY PME | DATE 4-75 | REVISED |
| DETAILED BY E.L.U. | CHECKED BY B.J.L. | DATE 4-75 | REVISED |
| TRACED BY | CHECKED BY | DATE | REVISED |

DATE 7/75

SHEET 7

COMMONWEALTH OF KENTUCKY
BUREAU OF HIGHWAYS
FRANKFORT
COUNTY OF
JEFFERSON
LOUISVILLE-LEXINGTON
ROAD
STATION 267+00
P. E. PROJECT NO. I64-2(92)

| CONSTRUCTION PROJECT NO. | MAINTENANCE PROJECT NO. | DRAWING NO. |
|---|---|---|
| | | 19238 |

UPDATE DATE _____
LETTING DATE _____

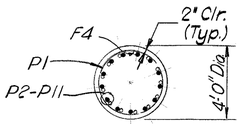


Cols. 124E thru 129B, 131E

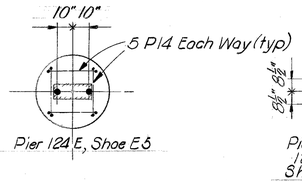


Pier 124E, Shoe E5

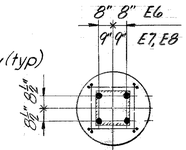


Piers 125A, 127E, 128E, 129B, 131E; Shoes E6, E7, E8

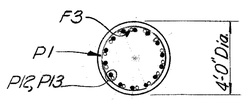


Col. 130A

## COLUMN SECTIONS

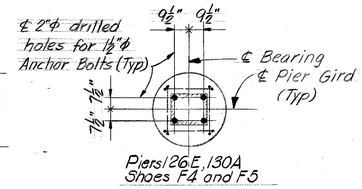


Piers 126E, 130A
Shoes F4 and F5

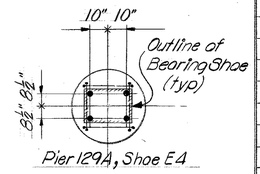


Pier 129A, Shoe E4

## ANCHOR BOLT LOCATIONS

See Framing Plans for orientation

The P14 Bars must be accurately located so that they will not interfere with drilling Anchor Bolt holes.

## BILL OF REINFORCEMENT

| Mark | Size | Type | Nº | Length | Location |
|---|---|---|---|---|---|
| F1 | 8 | 1 | 147 | 8'-10" | Footings |
| F2 | 8 | 1 | 21 | 10'-10" | do |
| F3 | 9 | 2 | 28 | 8'-4" | do |
| F4 | 8 | 2 | 130 | 7'-9" | do |
| | | | | | |
| P1 | 4 | 3 | 213 | 13'-1" | Columns |
| P2 | 8 | Str | 13 | 26'-10" | Col 124E |
| P3 | 8 | " | 13 | 28'-6" | " 125A |
| P4 | 8 | " | 13 | 28'-0" | " 126E |
| P5 | 8 | " | 13 | 24'-5" | " 127E |
| P6 | 8 | " | 13 | 26'-6" | " 128E |
| P7 | 8 | " | 13 | 26'-11" | " 129A |
| P8 | 8 | " | 13 | 27'-4" | " 129B-N |
| P9 | 8 | " | 13 | 27'-10" | " 129B-S |
| P10 | 8 | " | 13 | 27'-3" | " 131E-N |
| P11 | 8 | " | 13 | 22'-4" | " 131E-S |
| P12 | 9 | " | 14 | 25'-10" | " 130A-N |
| P13 | 9 | " | 14 | 26'-10" | " 130A-S |
| P14 | 4 | 4 | 120 | 3'-5" | Col Tops |
| | | | | | |

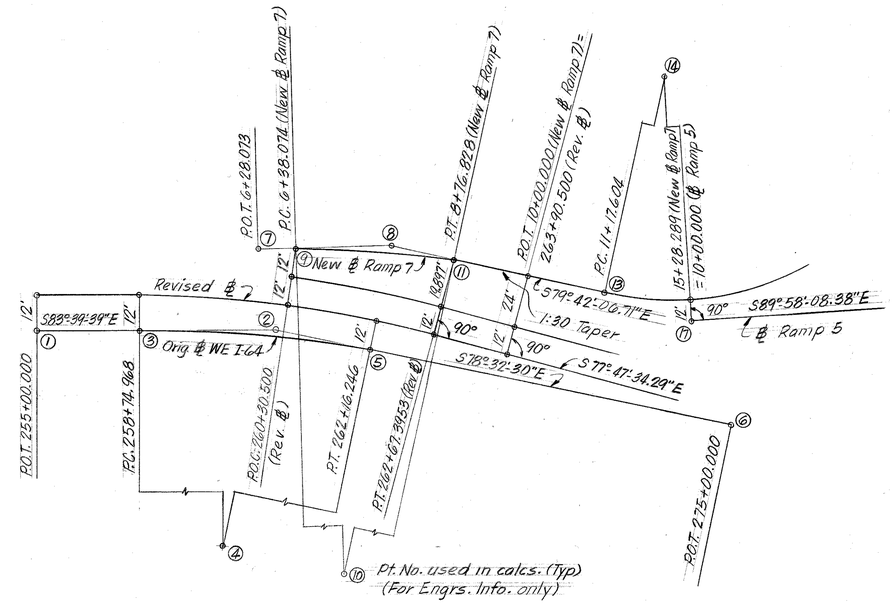


## HORIZONTAL ALIGNMENT

For ℄ WE I-64 and New ℄ Ramp 7
Curve Data, see Layout Shts 3&4

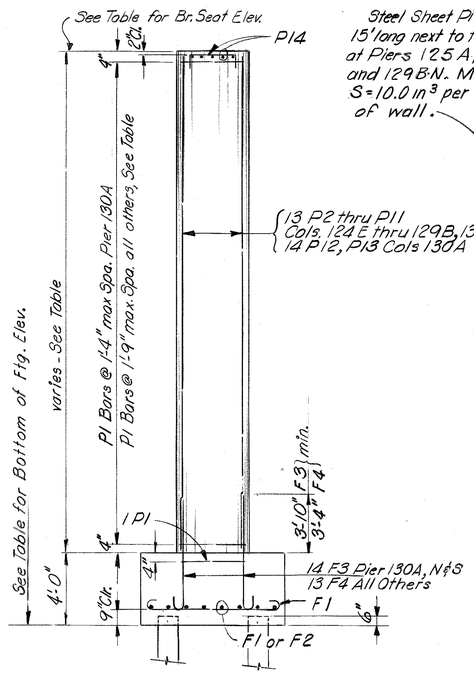


## ELEVATION

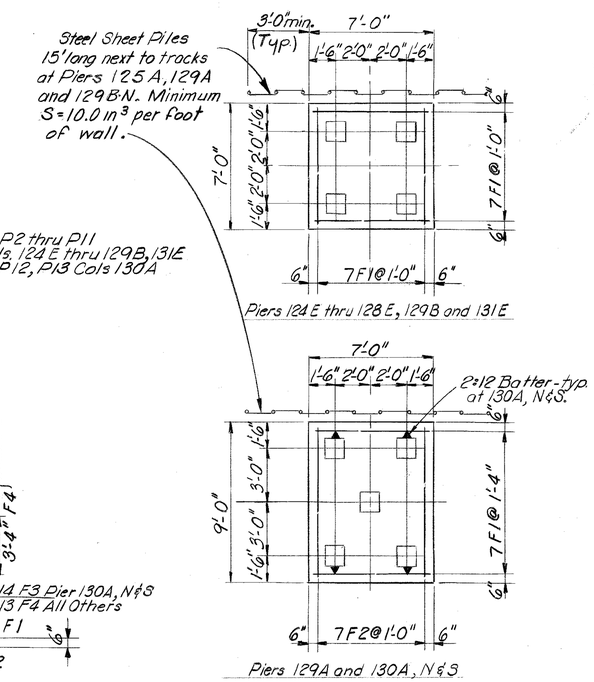


## FOOTING PLANS

See Pile Record Sheets for orientation

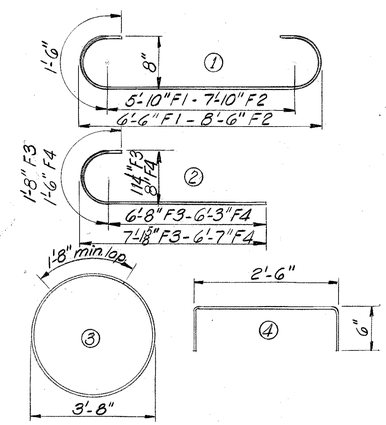


## BENDING DIAGRAMS

| Pier Nº | Bot. Ftg. | Br. Seat | Col. Ht. | Nº P1 Bars |
|---|---|---|---|---|
| 124E | 433.003 | 464.003 | 27'-0" | 17 |
| 125A | 431.730 | 464.397 | 28'-8" | 17 |
| 126E | 433.466 | 465.633 | 28'-2" | 17 |
| 127E | 435.410 | 463.993 | 24'-7" | 15 |
| 128E | 435.806 | 466.473 | 26'-8" | 16 |
| 129A | 435.224 | 466.307 | 27'-1" | 17 |
| 129B-N | 434.855 | 466.355 | 27'-6" | 17 |
| 129B-S | 434.904 | 466.904 | 28'-0" | 17 |
| 130A-N | 435.372 | 465.372 | 26'-0" | 20 |
| 130A-S | 435.226 | 466.226 | 27'-0" | 21 |
| 131E-N | 435.897 | 461.314 | 21'-5" | 13 |
| 131E-S | 435.784 | 462.284 | 22'-6" | 14 |

## COLUMN DATA TABLE

## ESTIMATE OF QUANTITIES

| ITEM | UNIT | AMOUNT |
|---|---|---|
| Class "A" Concrete | Cu. Yds. | 240.0 |
| Steel Reinforcement | Lbs. | 21,222 |
| Structure Excavation - Common | Cu. Yds. | 280 |
| Piles - 14" Cast In Place - Furnished | Lin. Ft. | 1571 |
| "do" - Driven | Lin. Ft. | 1571 |
| Sheet Piling * | Sq. Ft. | 585 |
| | | |
| | | |

*Sheet Piling is Incidental to Structure Excavation, Common

NOTE: Mr. W. T. Dudley, Superintendent, L & N Railroad Company, P. O. Box 1198, Louisville, Kentucky 40201, should be notified when the work on the piers near the railroad tracks is started so that affected Railroad Company employees can be alerted.

SHEET 8

PIERS

| | | | |
|---|---|---|---|
| DESIGNED BY DMB | CHECKED BY RBS | DATE 3-74 | REVISED |
| DETAILED BY RBS | CHECKED BY DMB | DATE 4-75 | REVISED |
| TRACED BY | CHECKED BY | DATE | REVISED |

COMMONWEALTH OF KENTUCKY
BUREAU OF HIGHWAYS
FRANKFORT
COUNTY OF
JEFFERSON
LOUISVILLE-LEXINGTON
ROAD

STATION 267+00 P. E. PROJECT NO. I64-2(92)

| CONSTRUCTION PROJECT NO. | MAINTENANCE PROJECT NO. | DRAWING NO. |
|---|---|---|
| | | 19238 |

UPDATE DATE
LETTING DATE

| Pt.- Pt. | Distance | Bearing |
|---|---|---|
| 101 - 160 | 86.837' | N 78°-32'-30"W |
| 159 - 160 | 32.902 | S 6-20-21 W |
| 161 - 159 | 8.469 | " |
| 157 - 101 | 36.167 | S 9-55-59 W |
| 162 - 157 | 13.082 | S 11-47-22 W |
| 157 - 203 | 3.038 | " |
| 161 - 162 | 90.000 | S 83-39-39 E |
| 159 - 157 | 88.874 | S 80-43-24 E |
| 159 - 200 | 18.000 | " |

| Pt. - Pt. | Distance | Bearing |
|---|---|---|
| 201 - 203 | 71.007' | S 80°-45-06 E |
| 200 - 202 | 9.404 | N 9-16-36 E |
| 200 - 201 | 3.000 | " |
| 161 - 202 | 18.458 | S 83-39-39 E |
| 161 - 162 | 90.000 | " |

| Pt.- Pt. | Distance | Bearing |
|---|---|---|
| 101 - 102 | 85.912' | S 78°-32'-30"E |
| 156 - 157 | 86.885 | S 79-26-07 E |
| 155 - 156 | 0.750 | " |
| 203 - 204 | 86.922 | S 80-45-06 E |
| 204 - 206 | 0.751 | " |
| 102 - 103 | 0.750 | S 78-32-30 E |
| 103 - 155 | 37.521 | N 11-27-30 E |
| 155 - 206 | 5.052 | " |
| 102 - 156 | 37.509 | " |
| 156 - 204 | 5.035 | " |

| Pt- Pt | Distance | Bearing |
|---|---|---|
| 103 - 104 | 86.000' | S 78°-32'-30"E |
| 207 - 104 | 8.300 | " |
| 206 - 209 | 77.731 | S 80-09-17 E |
| 209 - 209A | 8.303 | " |
| 207 - 209 | 44.761 | N 11-27-30 E |
| 208 - 209 | 7.240 | " |
| 207 - 208 | 37.521 | " |
| 104 - 208A | 37.521 | " |
| 208A - 209A | 7.474 | " |
| 208 - 208A | 8.300 | S 78-32-30 E |
| 207 - 104 | 8.300 | " |
| 155 - 208 | 77.700 | " |

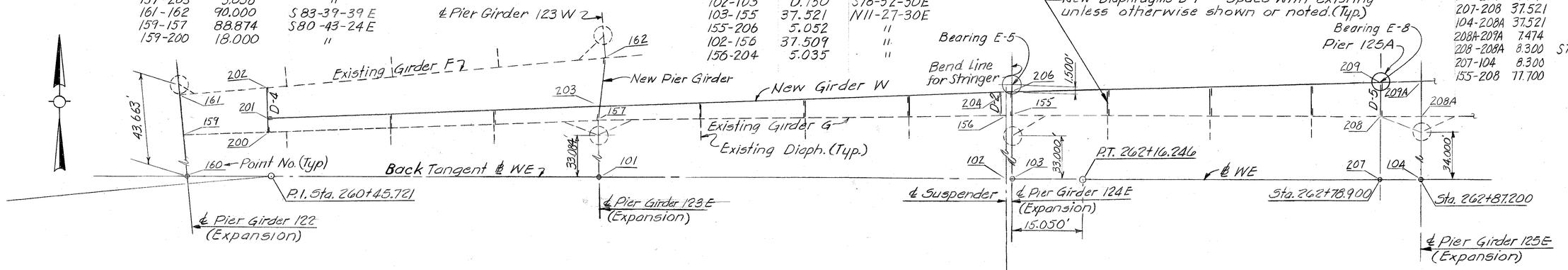


| Pt-Pt | Distance | Bearing |
|---|---|---|
| 209-222 | 116.346' | S 80°-09'-17"E |
| 209-221 | 26.310 | " |
| 221-222 | 90.036 | " |
| 216-217 | 90.009 | S 79-20-54 E |
| 104-105 | 108.000 | S 78-32-30 E |
| 208A-212 | 108.000 | " |
| 208A-211 | 18.000 | " |
| 211-216 | 3.990 | N 11-27-30 E |
| 216-221 | 3.991 | " |
| 105-212 | 37.521 | " |
| 212-217 | 5.258 | " |
| 217-222 | 5.258 | " |

| Pt.- Pt. | Distance | Bearing |
|---|---|---|
| 222 - 223 | 108.043' | S 80°-09-17 E |
| 217 - 218 | 108.011 | S 79-20-54 E |
| 105 - 106 | 108.000 | S 78-32-30 E |
| 212 - 213 | 108.000 | " |
| 106 - 213 | 37.521 | N 11-27-30 E |
| 213 - 218 | 6.778 | " |
| 218 - 223 | 6.779 | " |

| Pt. - Pt. | Distance | Bearing |
|---|---|---|
| 223 - 224 | 86.034' | S 80°-09'-17 E |
| 224 - 225 | 0.750+ | " |
| 218 - 219 | 86.008 | S 79-20-54 E |
| 219 - 220 | 0.750+ | " |
| 106 - 107 | 86.000 | S 78-32-30 E |
| 107 - 108 | 0.750 | " |
| 213 - 214 | 86.000 | " |
| 214 - 215 | 0.750 | " |

| Pt-Pt. | Distance | Bearing |
|---|---|---|
| 107-214 | 37.521' | N 11°-27'-30"E |
| 214-219 | 7.989 | " |
| 219-224 | 7.989 | " |
| 108-215 | 37.521 | " |
| 215-220 | 8.000 | " |
| 220-225 | 8.000 | " |

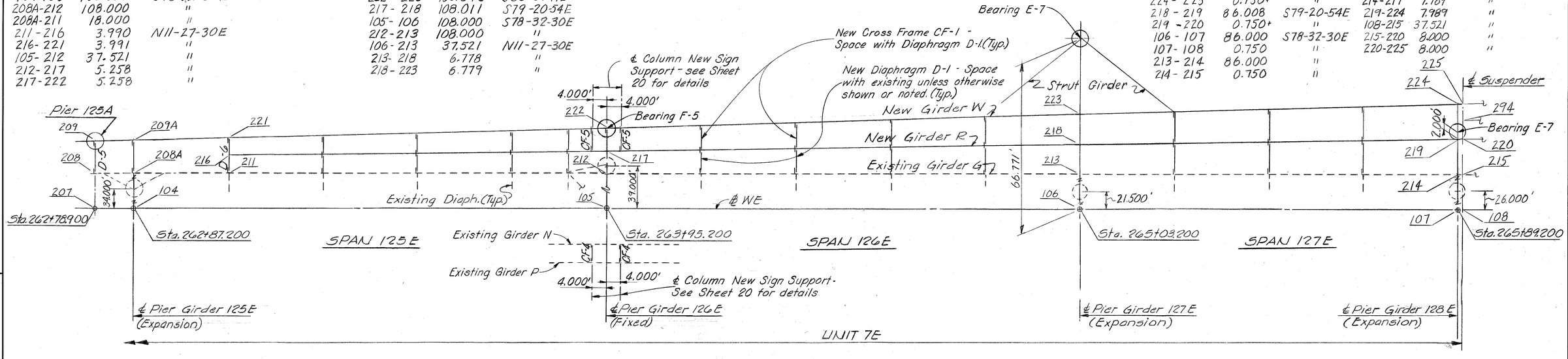


EXISTING STRUCTURE DIMENSIONS

Dimensions were taken from original Design Drawings. All dimensions should be verified by field measurement before fabrication begins.

Note: All dimensions shown on this sheet are horizontal.

NOTES:
For Girder Details see Sheets 11 thru 14.
For Pier Girder and Diaphragm Details see Sheets 15 thru 18.
For Cross Frame Details see Sheet 18.
For Bearing Details see Sheet 22.

FRAMING PLAN UNITS 6(PT.) & 7E
STRUCTURAL STEEL

Sheet 9

COMMONWEALTH OF KENTUCKY
BUREAU OF HIGHWAYS
FRANKFORT
COUNTY OF
JEFFERSON
LOUISVILLE-LEXINGTON
ROAD
STATION 267+00 | P. E. PROJECT NO. 164-2(92)
CONSTRUCTION PROJECT NO. | MAINTENANCE PROJECT NO. | DRAWING NO. 19238

DESIGNED BY RHM & FCW CHECKED BY FCW & DMB DATE 4-75 REVISED
DETAILED BY CHECKED BY DATE REVISED
TRACED BY CHECKED BY DATE REVISED

✓ For Geometrics made by MHC 12-14-75
Add Diaph

| Pt.-Pt. | Distance | Bearing |
|---|---|---|
| 220-294 | 4.000' | N11°27'30"E |
| 108-127 | 60.000 | S78-32-30E |
| 215-215A | 60.000 | " |
| 220-226 | 60.000 | " |
| 294-227 | 60.054 | S80-57-52E |
| 225-228 | 60.171 | S82-52-03E |
| 127-215A | 37.521 | N11-27-30E |
| 215A-226 | 8.000 | " |
| 226-227 | 6.538 | " |
| 227-228 | 6.000 | " |
| 220A-294A | 4.053 | " |
| 220A-225A | 8.094 | " |
| 220-220A | 1.250 | S78-32-30E |
| 225-225A | 1.254 | S82-52-03E |

| Pt.-Pt. | Distance | Bearing |
|---|---|---|
| 127-109 | 25.250' | S78°32'30"E |
| 109-128 | 44.750 | " |
| 215A-215B | 70.000 | " |
| 226-234 | 70.000 | " |
| 229-234 | 17.500 | " |
| 227-236 | 70.063 | S80-57-51E |
| 231-236 | 17.516 | " |
| 228-238 | 70.345 | S84-13-16E |
| 233-238 | 17.586 | " |
| 232-237 | 17.541 | S82-27-34E |
| 230-235 | 17.505 | S79-52-29E |

| Pt.-Pt. | Distance | Bearing |
|---|---|---|
| 128-215B | 37.521' | N11°27'30"E |
| 215B-234 | 8.000 | " |
| 234-235 | 4.750 | " |
| 235-236 | 4.750 | " |
| 236-237 | 5.000 | " |
| 237-238 | 5.000 | " |
| 231-232 | 4.542 | " |
| 232-233 | 4.458 | " |
| 229-230 | 4.343 | " |
| 230-231 | 4.417 | " |

Ⓐ - See Section D-D or E-E, Sheet 17 for End Connections; see Sheet 11 for Camber.

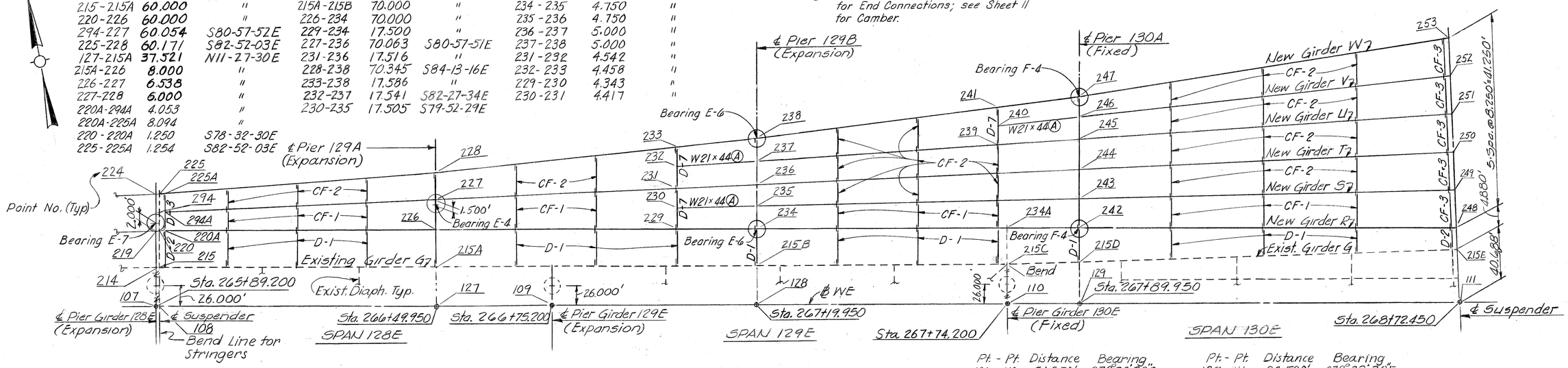


## FRAMING PLAN UNIT 8E

| Pt.-Pt. | Distance | Bearing |
|---|---|---|
| 128-110 | 54.250' | S78°32'30"E |
| 110-129 | 15.750 | " |
| 215B-215C | 54.250 | " |
| 215C-215D | 15.758 | S80-23-55E |
| 234-242 | 70.000 | S78-32-30E |
| 235-243 | 70.019 | S79-52-29E |
| 236-244 | 70.076 | S81-12-47E |
| 237-245 | 70.164 | S82-27-34E |
| 239-245 | 17.541 | " |
| 238-247 | 70.576 | S85-52-05E |
| 241-247 | 17.644 | " |
| 240-246 | 17.609 | S84-55-45E |
| 239-241 | 8.154 | N11-27-30E |
| 239-240 | 4.077 | " |
| 110-215C | 37.521 | " |
| 215C-234A | 8.000 | " |
| 129-242 | 45.521 | " |
| 129-215D | 38.031 | " |
| 242-243 | 6.379 | " |
| 243-244 | 6.387 | " |
| 244-245 | 6.528 | " |
| 245-246 | 4.838 | " |
| 246-247 | 4.368 | " |

| Pt.-Pt. | Distance | Bearing |
|---|---|---|
| 129-111 | 82.500' | S78°32'30"E |
| 215D-215E | 80.683 | S80-23-55E |
| 242-248 | 80.418 | S78-32-30E |
| 243-249 | 80.062 | S79-52-29E |
| 244-250 | 79.750 | S81-12-47E |
| 245-251 | 79.472 | S82-27-34E |
| 246-252 | 79.403 | S84-55-45E |
| 247-253 | 79.554 | S87-43-58E |

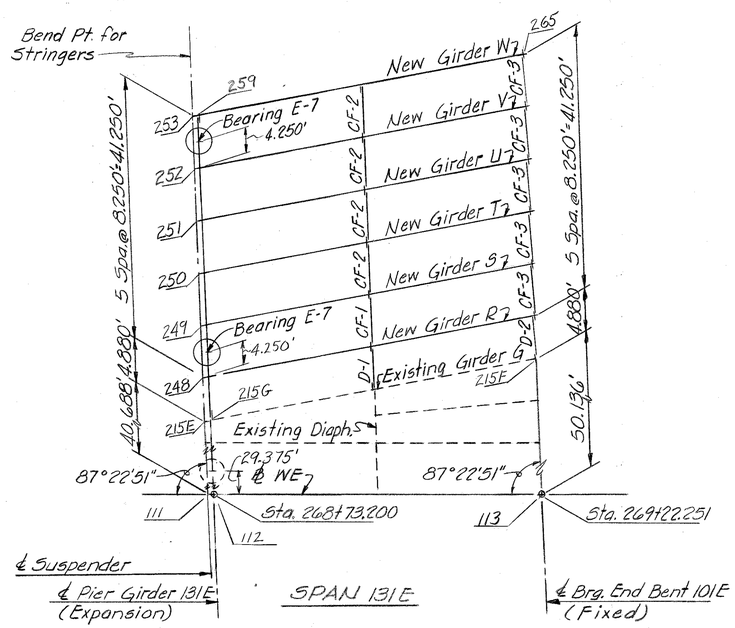


## FRAMING PLAN UNIT 9E

| Pt.-Pt. | Distance | Bearing |
|---|---|---|
| 111-112 | 0.750' | S78°32'30"E |
| 112-113 | 49.051 | " |
| 111-253 | 86.818 | N 8-50-21E |
| 113-265 | 96.266 | " |
| 215E-215F | 50.263 | S89-21-50E |
| 112-215G | 40.831 | N 8-50-21E |
| 215G-259 | 46.130 | " |
| 215F-265 | 46.130 | " |
| 253-265 | 50.263 | S89-21-50E |
| 253-259 | 0.764 | " |
| 259-265 | 49.506 | " |

NOTES:
All dimensions shown on this sheet are horizontal.
For Girder Details see Sheets 11 thru 14.
For Pier Girder and Diaphragm Details see Sheets 15 thru 18.
For Cross Frame Details see Sheet 18.
For Bearing Details see Sheet 22.

FRAMING PLAN UNITS 8E & 9E

STRUCTURAL STEEL

Sheet 10

COMMONWEALTH OF KENTUCKY
BUREAU OF HIGHWAYS
FRANKFORT
COUNTY OF
JEFFERSON
LOUISVILLE-LEXINGTON
ROAD
STATION 267+00 P. E. PROJECT NO. I64-2(92)

| CONSTRUCTION PROJECT NO. | MAINTENANCE PROJECT NO. | DRAWING NO. |
|---|---|---|
| | | 19238 |

UPDATE DATE
LETTING DATE

DESIGNED BY RHM CHECKED BY EW
DETAILED BY EW CHECKED BY EW & DMB DATE 6/75
TRACED BY CHECKED BY DATE
REVISED: DATE
REVISED: DATE
REVISED: DATE

V for Geometrics made by HAC 12 Mar 75
Add Draft

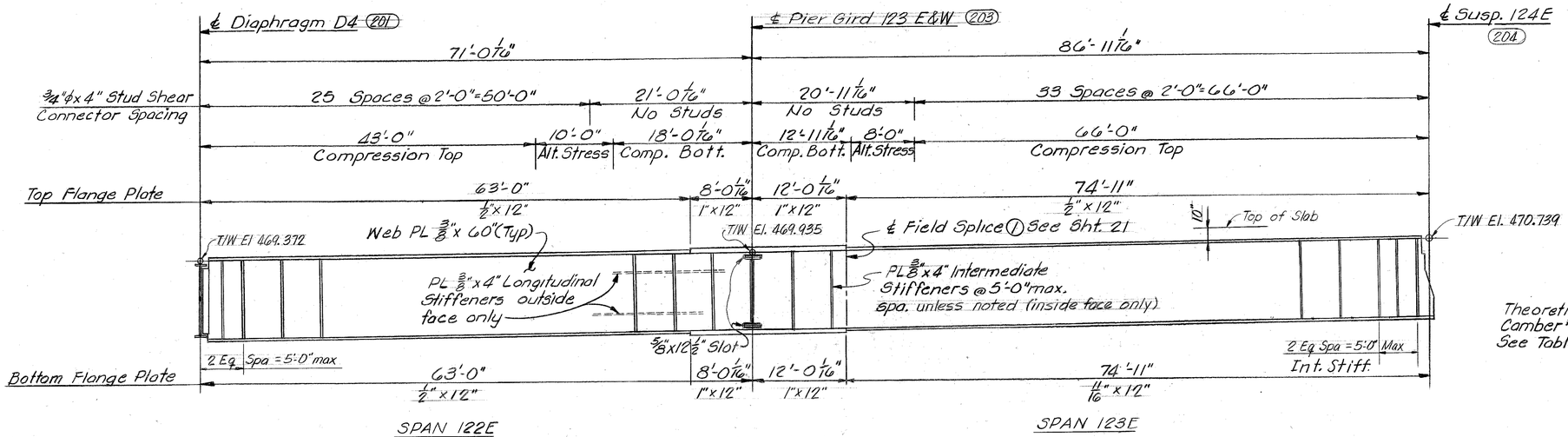


## ELEVATION GIRDER W - UNIT 6

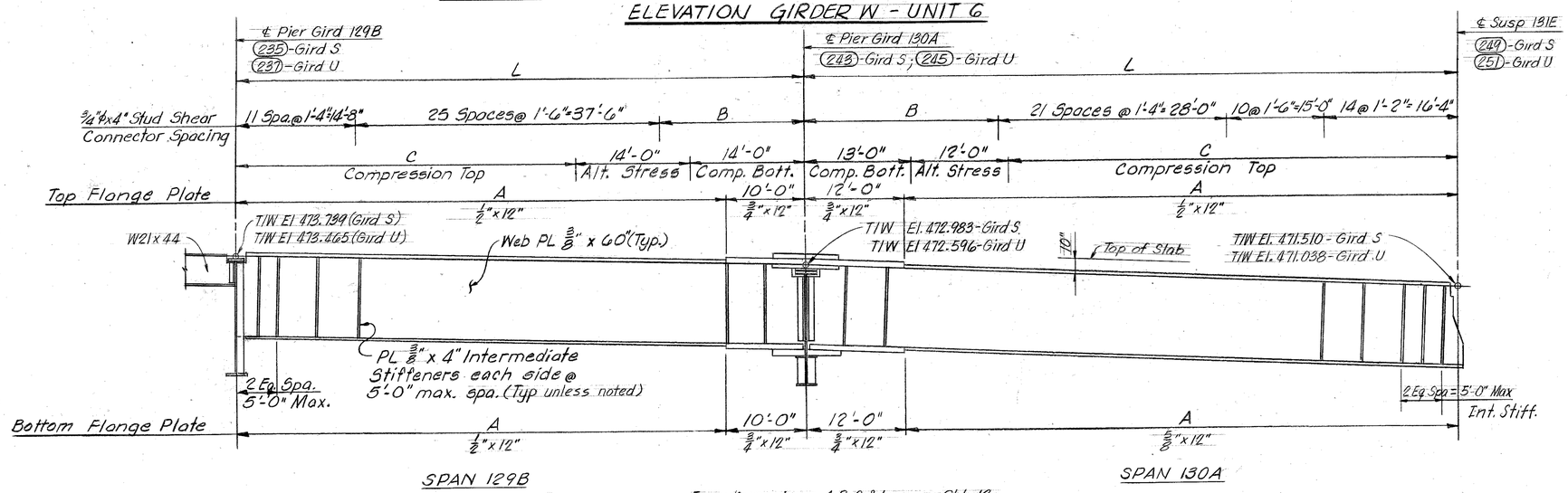


For dimensions A, B, C & L, see Sht 13.

## ELEVATION GIRDERS U & S - UNIT 8E

### NOTES

T/W Elev. shown is theoretical Top of Web Elevation at ℄ support member or ℄ suspender.

For flange to web weld, optional shop web splice, and shop flange splice details see Sht 14.

(201) indicates points shown on Framing Plan, Sheets 9 & 10.

For shear connector, longitudinal and intermediate stiffener details see Sht 13.

For bearing stiffener details see Sht 14.

For suspender details see Sheets 19 & 20.

For General Notes see Sht 2.

**All Structural Steel is A-36 unless noted.**

For Bearing Details see Sht. 22.

For Girder Splices see Sht. 21.

Pier Girders, Diaphragms D-2 thru D-6, and Cross Frames CF-3 shall be vertical in the erected position.

The estimated wgt of Structural Steel is 450,000 lbs. The wgt of Bearings, Exp Dams and Armored Edges is not included. See Shts 22-24.

The estimated wgt of Stud Shear Connectors is 1858 lbs.

Fillet weld size to be minimum size specified by AWS Specifications unless noted otherwise but not less than 1/4".

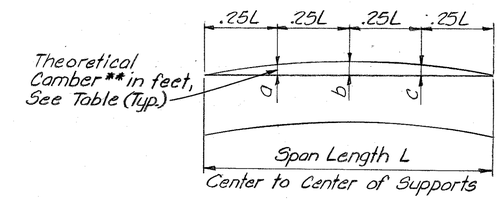


## CAMBER DIAGRAM

### CAMBER TABLE

| SPAN BEGIN | SPAN END | GIRDER | a | b | c |
|---|---|---|---|---|---|
| D-4 | 123E | W | .017 | .011 | -.007 |
| 123E | 124E | W | .062 | .110 | .088 |
| 124E | 125E | W | .030 | .028 | 0 |
| | | | | | |
| 125E | 126E | W | .089 | .143 | .087 |
| D-6 | 126E | R | .060 | .070 | .030 |
| | | | | | |
| 126E | 127E | W | 0 | .030 | .016 |
| 126E | 127E | R | .040 | .070 | .033 |
| | | | | | |
| 127E | 128E | W | .061 | .095 | .075 |
| 127E | 128E | R | .035 | .079 | .065 |
| | | | | | |
| 128E | 129A | W | .012 | .017 | .008 |
| 128E | 129A | T | .011 | .012 | .004 |
| 128E | 129A | R | .016 | .019 | .008 |
| | | | | | |
| 129A | 129B | W | .008 | .026 | .016 |
| 129A | 129B | U | | *.010 | |
| 129A | 129B | T | .010 | .038 | .027 |
| 129A | 129B | S | | *.010 | |
| 129A | 129B | R | .009 | .032 | .022 |

| SPAN BEGIN | SPAN END | GIRDER | a | b | c |
|---|---|---|---|---|---|
| 129B | 130A | W | .001 | .004 | -.001 |
| 129B | 130A | V | | *.010 | |
| 129B | 130A | U | .022 | .025 | .009 |
| 129B | 130A | T | -.006 | -.008 | -.012 |
| 129B | 130A | S | .022 | .025 | .009 |
| 129B | 130A | R | -.001 | -.001 | -.006 |
| | | | | | |
| 130A | 131E | W | .035 | .061 | .050 |
| 130A | 131E | V | .082 | .118 | .082 |
| 130A | 131E | U | .032 | .061 | .051 |
| 130A | 131E | T | .050 | .082 | .066 |
| 130A | 131E | S | .032 | .061 | .051 |
| 130A | 131E | R | .045 | .077 | .061 |
| | | | | | |
| 131E | 101E | W | .020 | .027 | .020 |
| 131E | 101E | V | .018 | .025 | .018 |
| 131E | 101E | U | .018 | .025 | .018 |
| 131E | 101E | T | .018 | .025 | .018 |
| 131E | 101E | S | .018 | .025 | .018 |
| 131E | 101E | R | .013 | .019 | .013 |

* Place natural camber up.

** Theoretical camber includes the weight of structural steel, slab, curb, plinth, handrail, and overlay.

SHEET 11

**COMMONWEALTH OF KENTUCKY**
BUREAU OF HIGHWAYS
FRANKFORT
COUNTY OF
**JEFFERSON**
**LOUISVILLE-LEXINGTON**
ROAD

STATION 267+00 — P. E. PROJECT NO. I64-2(92)

| CONSTRUCTION PROJECT NO. | MAINTENANCE PROJECT NO. | DRAWING NO. |
|---|---|---|
| | | 19238 |

GIRDER DETAILS
STRUCTURAL STEEL

LETTING DATE

DESIGNED BY RJS & DMB — CHECKED BY DMB & RBS — DATE 11-74 — REVISED
DETAILED BY R.H. Nc — CHECKED BY ELW — DATE 4-75 — REVISED
TRACED BY — CHECKED BY — DATE — REVISED

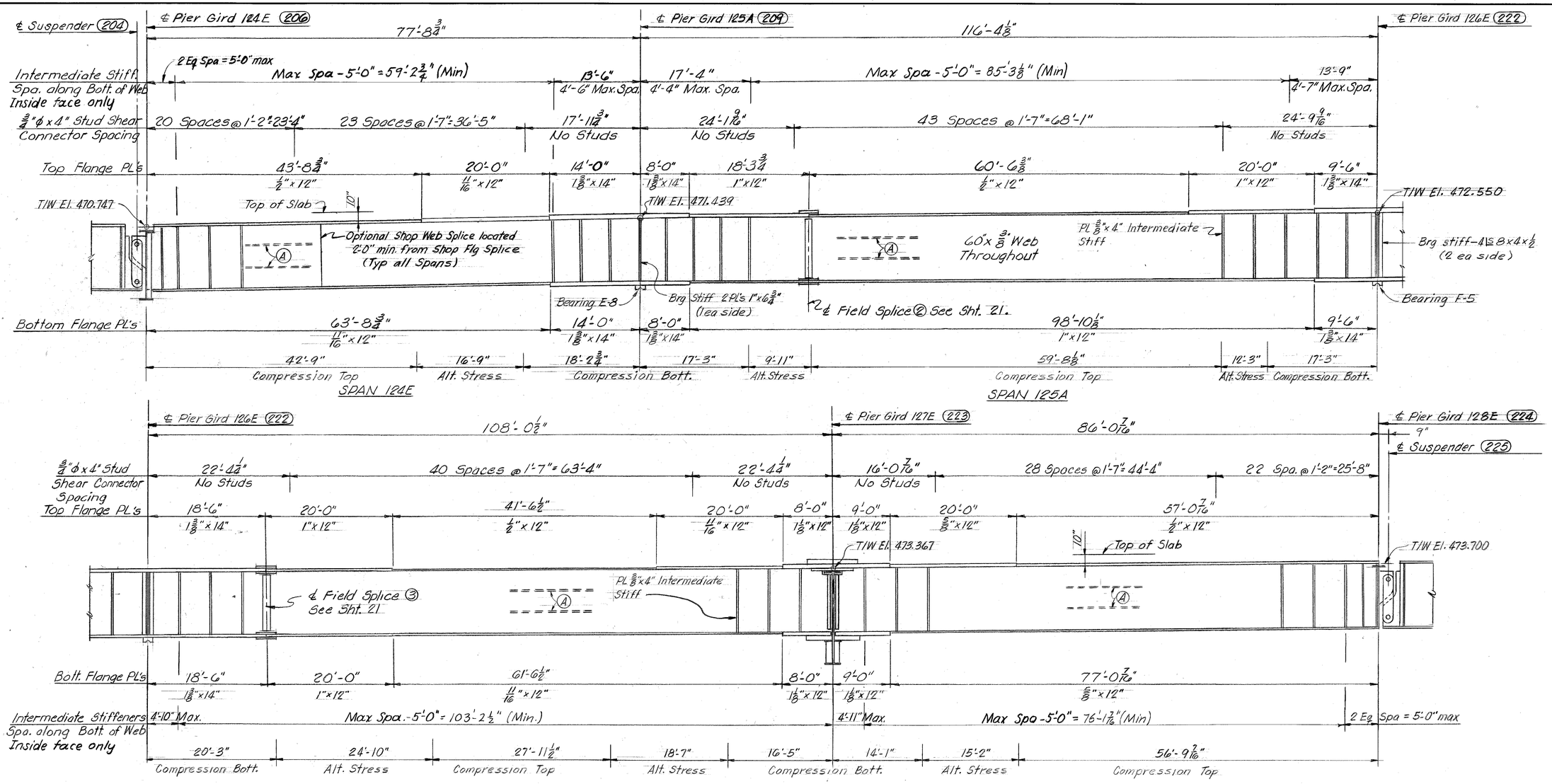


(A) 4" x 3/8" Longitudinal Stiffener Full Length On Outside Face Only.

For Notes see Sht 11.

ELEVATION - GIRDER W - UNIT 7E

SHEET 12

GIRDER DETAILS
STRUCTURAL STEEL

**COMMONWEALTH OF KENTUCKY**
BUREAU OF HIGHWAYS
FRANKFORT
COUNTY OF
**JEFFERSON**
**LOUISVILLE-LEXINGTON**
ROAD

STATION 267+00 | P. E. PROJECT NO. I64-2(92)

| CONSTRUCTION PROJECT NO. | MAINTENANCE PROJECT NO. | DRAWING NO. |
|---|---|---|
| | | 19238 |

UPDATE DATE
LETTING DATE

DESIGNED BY RMC CHECKED BY RBS DATE 11-74
DETAILED BY RHMC CHECKED BY EEG DATE 4-75
TRACED BY CHECKED BY DATE
REVISED DATE REVISED DATE REVISED DATE

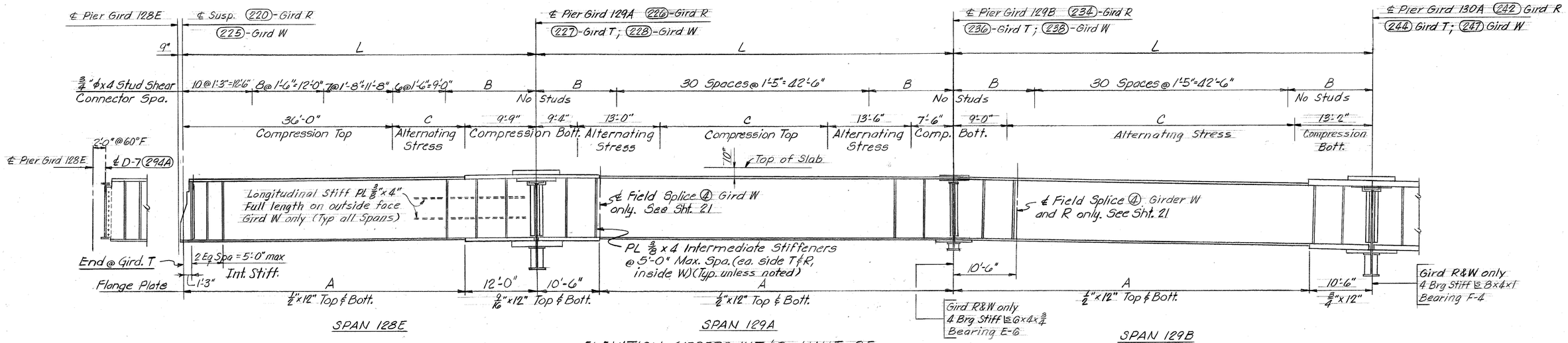


ELEVATION-GIRDERS W,T,&R-UNIT 8E

(Drawn for Gird T)

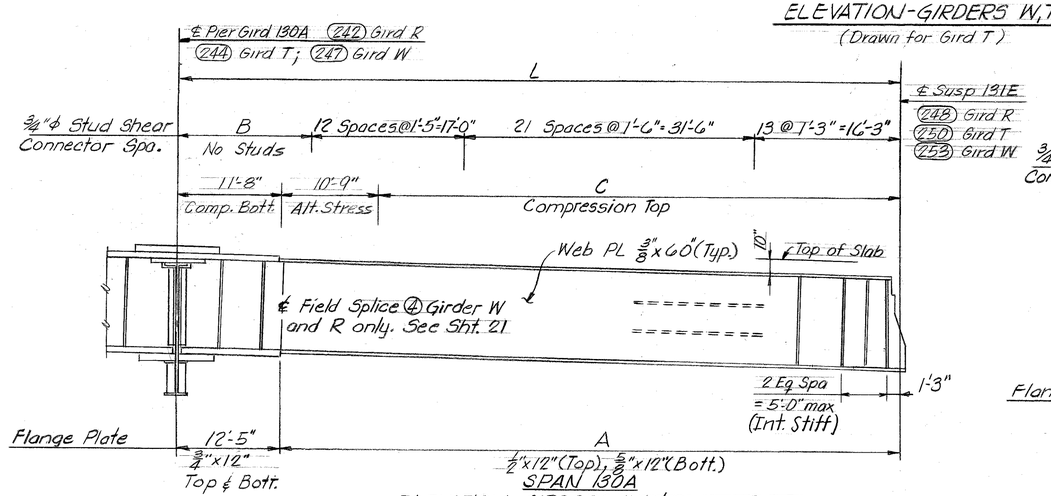


SPAN 130A

ELEVATION-GIRDERS W,T,&R-UNIT 8E

(Drawn for Gird T)

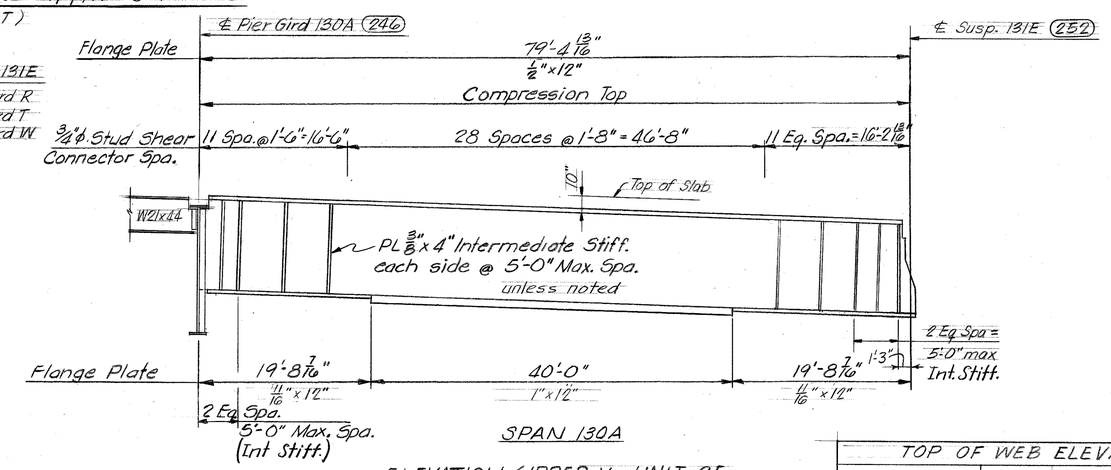


SPAN 130A

ELEVATION-GIRDER V-UNIT 8E

| TABLE OF DIMENSIONS | | | | | | |
|---|---|---|---|---|---|---|
| GIRDER | SPAN PIER | SPAN PIER | L | A | B | C |
| W | 128E | 129A | 60'-2 1/16" | 48'-2 1/16" | 15'-0 1/16" | 14'-5" |
| | 129A | 129B | 70'-4 3/8" | 59'-10 3/8" | 13'-11 7/16" | 27'-0 1/8" |
| | 129B | 130A | 70'-6 15/16" | 60'-0 15/16" | 14'-0 1/2" | 48'-4 15/16" |
| | 130A | 131E | 79'-6 3/8" | 67'-1 3/8" | 14'-9 5/8" | 57'-1 5/8" |
| U | 129B | 130A | 70'-1 15/16" | 60'-1 15/16" | 17'-1 15/16" | 42'-1 15/16" |
| | 130A | 131E | 79'-5 11/16" | 67'-5 11/16" | 20'-1 11/16" | 54'-5 11/16" |
| T | 128E | 129A | 60'-0 5/8" | 48'-0 5/8" | 14'-10 5/8" | 14'-3 5/8" |
| | 129A | 129B | 70'-0 3/4" | 59'-6 3/4" | 13'-9 3/8" | 26'-8 3/4" |
| | 129B | 130A | 70'-0 9/16" | 59'-6 9/16" | 13'-9 1/2" | 47'-10 15/16" |
| | 130A | 131E | 79'-9" | 67'-4" | 15'-0" | 57'-4" |
| S | 129B | 130A | 70'-0 1/4" | 60'-0 1/4" | 17'-10 1/4" | 42'-0 1/4" |
| | 130A | 131E | 80'-0 3/4" | 68'-0 3/4" | 20'-8 3/4" | 55'-0 3/4" |
| R | 128E | 129A | 60'-0" | 48'-0" | 14'-10" | 14'-3" |
| | 129A | 129B | 70'-0" | 59'-6" | 13'-9" | 26'-8" |
| | 129B | 130A | 70'-0" | 59'-6" | 13'-9" | 47'-10" |
| | 130A | 131E | 80'-3" | 68'-0" | 15'-8" | 58'-0" |

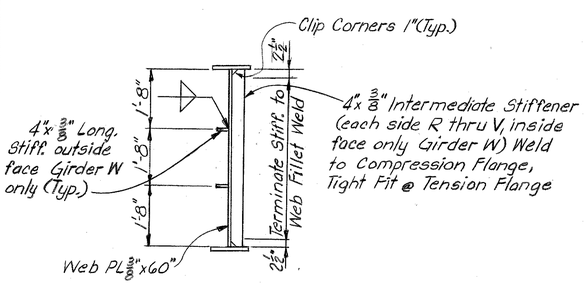


LONGITUDINAL AND INTERMEDIATE STIFFENER DETAILS

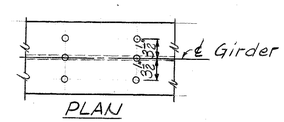


PLAN

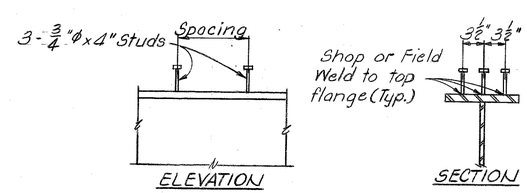


ELEVATION SECTION

SHEAR CONNECTOR DETAILS

(ASTM A-108)

| TOP OF WEB ELEVATIONS | | | | |
|---|---|---|---|---|
| | GIRDER | | | |
| | R | T | W | V |
| ℄ Susp 128E | 473.834 | 473.768 | 473.701 | — |
| ℄ Pier Gird 129A | 473.955 | 473.812 | 473.680 | — |
| ℄ Pier Gird 129B | 473.873 | 473.605 | 473.324 | — |
| ℄ Pier Gird 130A | 473.174 | 472.791 | 472.320 | 472.451 |
| ℄ Susp 131E | 471.743 | 471.275 | 470.552 | 470.796 |

For Notes see Sht 11.

GIRDER DETAILS

STRUCTURAL STEEL

SHEET 13

COMMONWEALTH OF KENTUCKY
BUREAU OF HIGHWAYS
FRANKFORT
COUNTY OF
JEFFERSON
LOUISVILLE-LEXINGTON
ROAD

STATION 267+00 P.E. PROJECT NO. 164-2(92)

CONSTRUCTION PROJECT NO. | MAINTENANCE PROJECT NO. | DRAWING NO. 19238

UPDATE DATE
LETTING DATE

DESIGNED BY DMB CHECKED BY RBS DATE 1-75 REVISED
DETAILED BY RHMc CHECKED BY ELW DATE 4-75 REVISED
TRACED BY CHECKED BY DATE REVISED

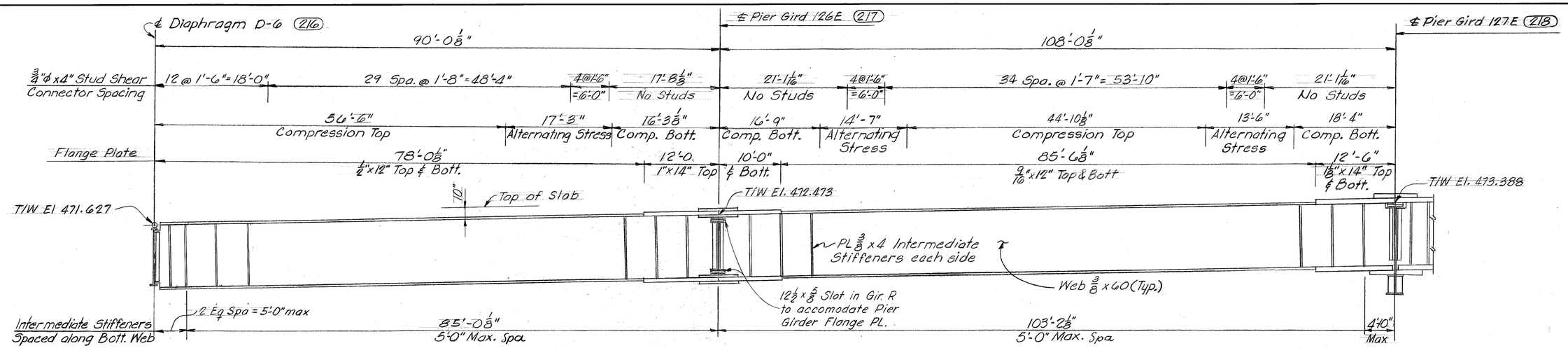


SPAN 125 E

ELEVATION-GIRDER R - UNIT 7E

SPAN 126 E

| TOP OF WEB ELEVATIONS | | |
|---|---|---|
| GIRDER | ℄ PIER GIRD 131E | ℄ BRG END BENT 101E |
| R | 471.725 | 470.666 |
| S | 471.494 | 470.550 |
| T | 471.261 | 470.434 |
| U | 471.025 | 470.318 |
| V | 470.784 | 470.110 |
| W | 470.541 | 469.868 |

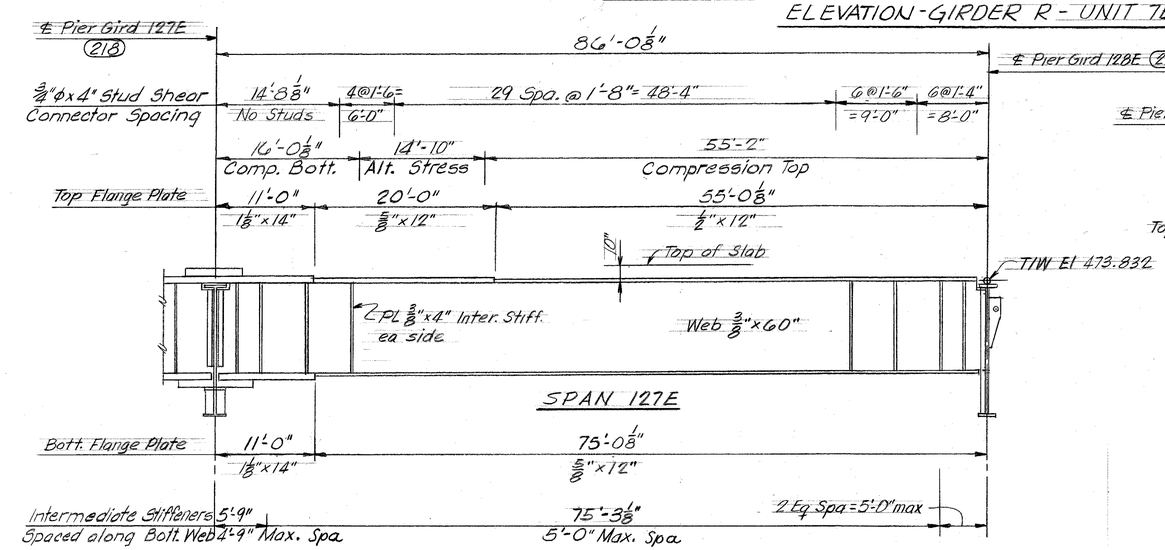


ELEVATION-GIRDER R - UNIT 7E

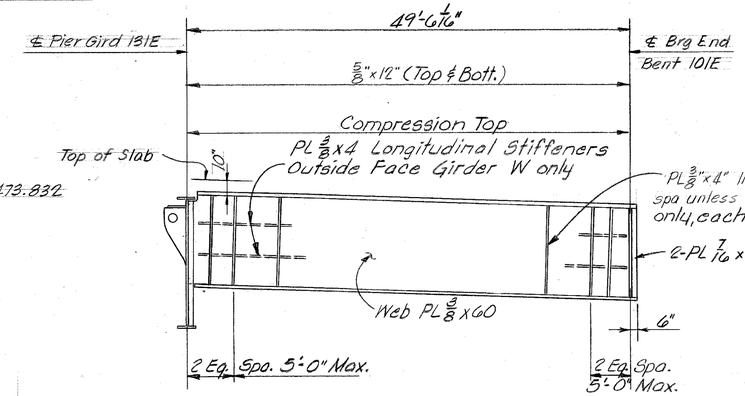


ELEVATION-GIRDERS R THRU W - SPAN 131E

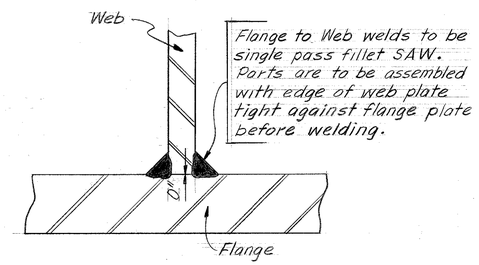


FLANGE TO WEB WELD
In the Flat Position

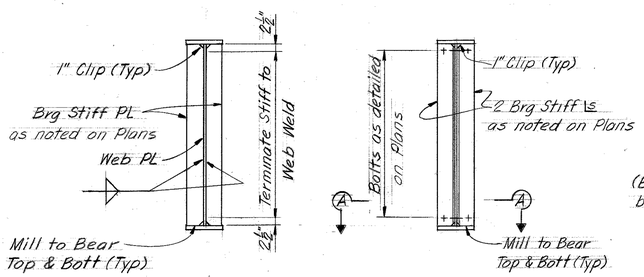


PLATE STIFF. ANGLE STIFF.

BEARING STIFFENER DETAILS

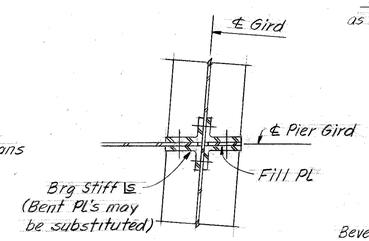


SECTION A-A

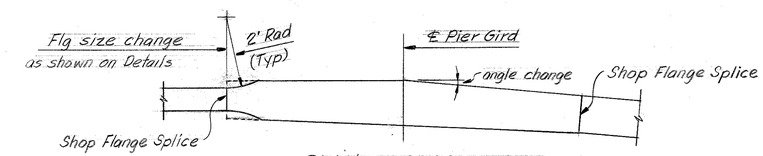


PLAN-GIRDER FLANGE

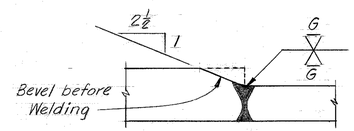


SHOP FLANGE SPLICE DETAIL
Refer also to Special Provision 101

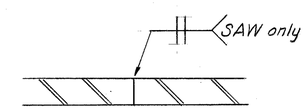


SHOP WEB SPLICE DETAIL

For Notes see Sht 11.

GIRDER DETAILS
STRUCTURAL STEEL

SHEET 14

**COMMONWEALTH OF KENTUCKY**
BUREAU OF HIGHWAYS
FRANKFORT
COUNTY OF
**JEFFERSON**
**LOUISVILLE-LEXINGTON**
ROAD

STATION 267+00 — P. E. PROJECT NO. I64-2(92)

| CONSTRUCTION PROJECT NO. | MAINTENANCE PROJECT NO. | DRAWING NO. |
|---|---|---|
| | | 19238 |

UPDATE DATE
LETTING DATE

| | | | |
|---|---|---|---|
| DESIGNED BY DMF | CHECKED BY RBS | DATE 11-74 | REVISED |
| DETAILED BY DMB | CHECKED BY ELW | DATE 4-75 | REVISED |
| TRACED BY | CHECKED BY | DATE | REVISED |

UPDATE DATE
LETTING DATE

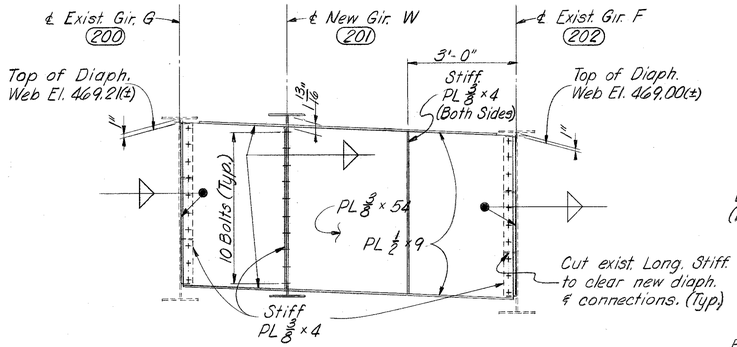


DIAPHRAGM D-4
(Looking West)

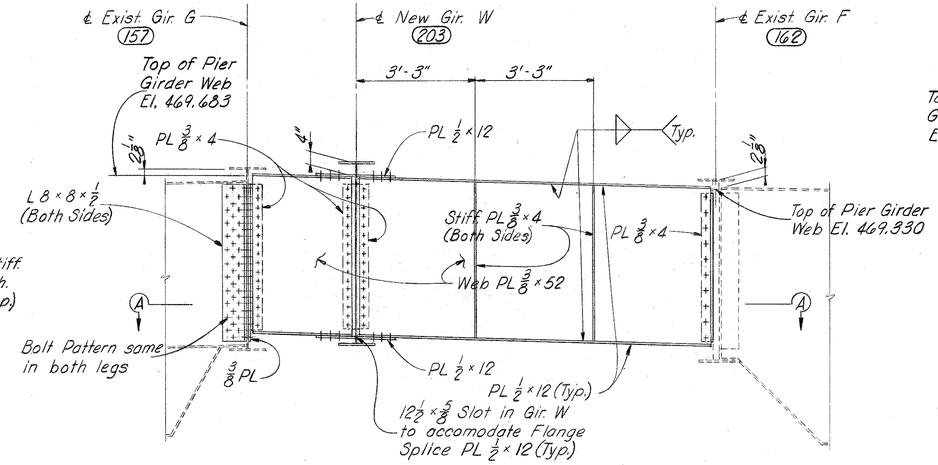


PIER GIRDER 123 E & W

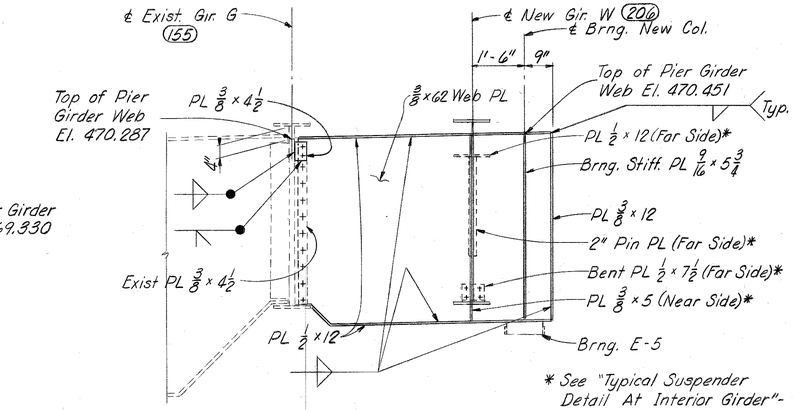


* See "Typical Suspender Detail At Interior Girder"- Sheet 19.

PIER GIRDER 124E

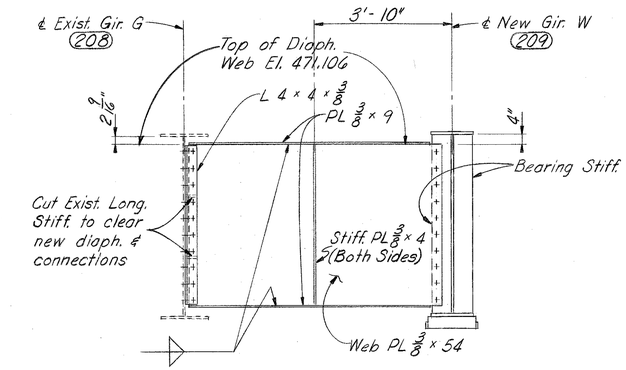


DIAPHRAGM D-5

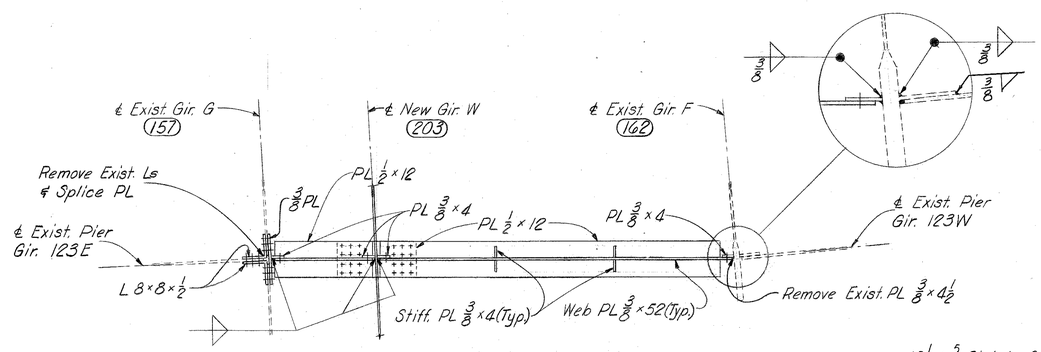


SECTION A-A

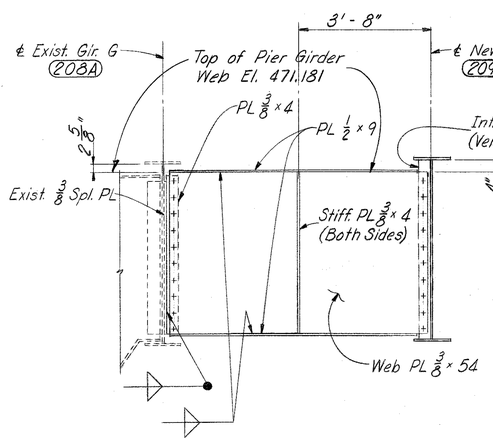


PIER GIRDER 125E

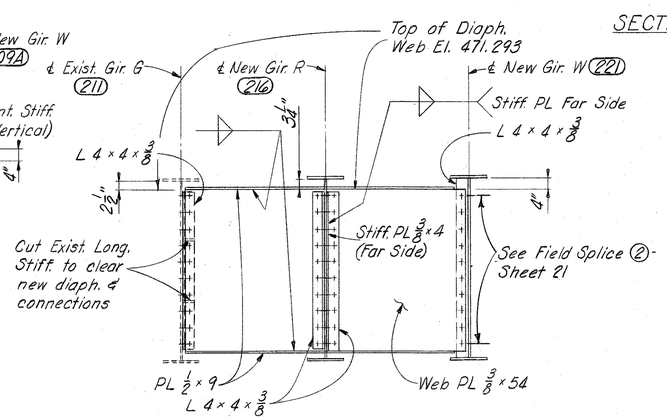


DIAPHRAGM D-6

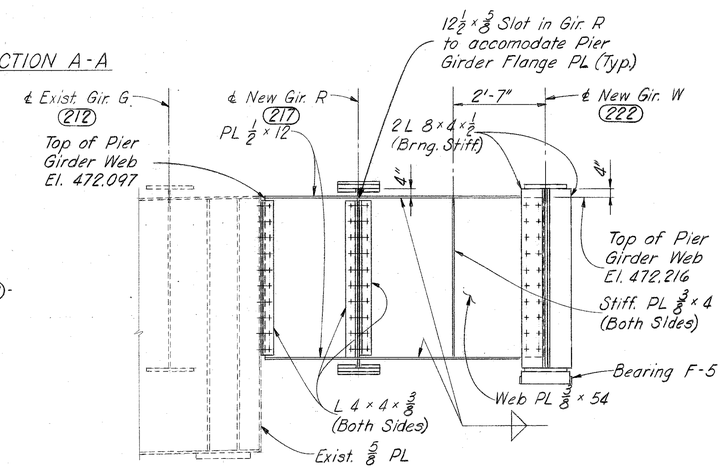


PIER GIRDER 126E

NOTES:

For Intermediate Stiffener Details see Sht. 17.
For Bearing Stiffener Details see Sheet 14.
(200) - indicates point shown on Framing Plan, Sheets 9 and 10.
For additional notes see Sheet 11.

SHEET 15

DIAPHRAGMS AND PIER GIRDERS
STRUCTURAL STEEL

**COMMONWEALTH OF KENTUCKY**
BUREAU OF HIGHWAYS
FRANKFORT
COUNTY OF
**JEFFERSON**
**LOUISVILLE-LEXINGTON**
ROAD
STATION 267+00 P. E. PROJECT NO. I64-2(92)

| CONSTRUCTION PROJECT NO. | MAINTENANCE PROJECT NO. | DRAWING NO. |
|---|---|---|
| | | 19238 |

DESIGNED BY RDS & DMB CHECKED BY DHH & RDS DATE 2/75 REVISED
DETAILED BY (EW) CHECKED BY DMB DATE 3-75 REVISED
TRACED BY CHECKED BY DATE REVISED

UPDATE DATE
LETTING DATE

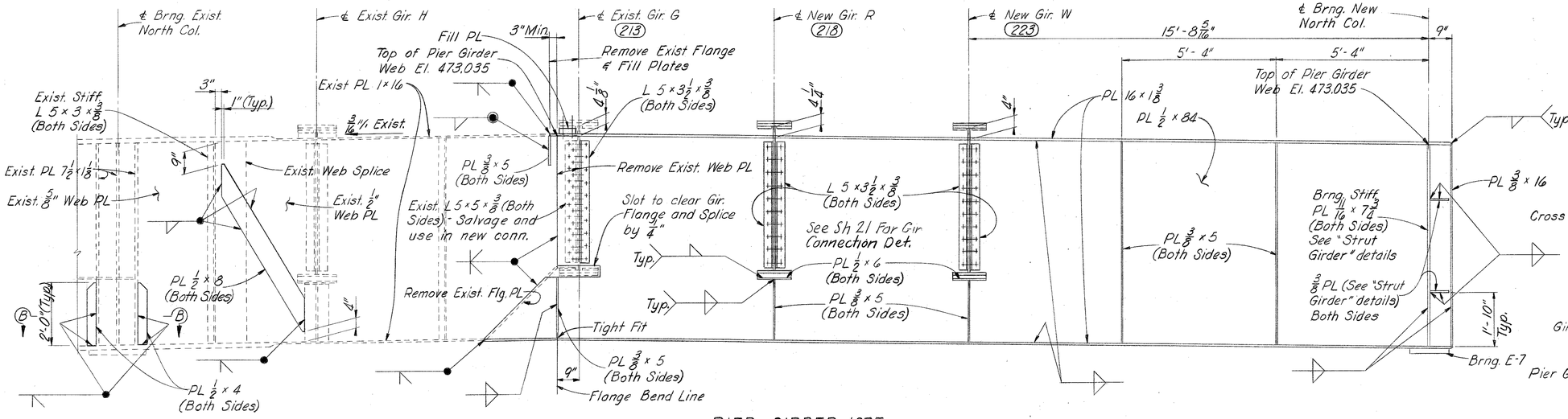


PIER GIRDER 127E

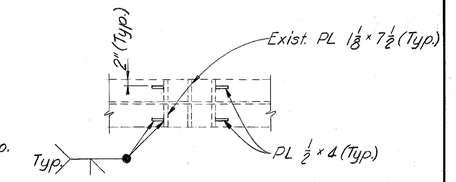


SECTION B-B

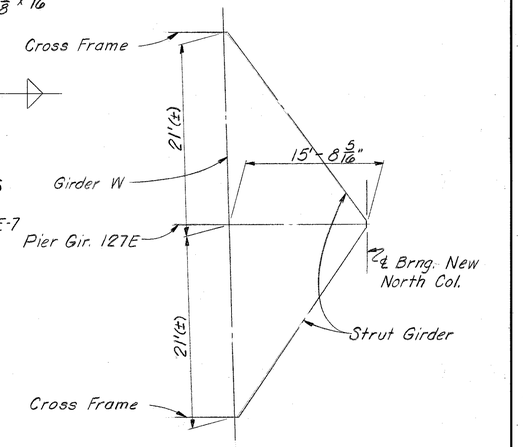


PART FRAMING PLAN @ PIER 127E

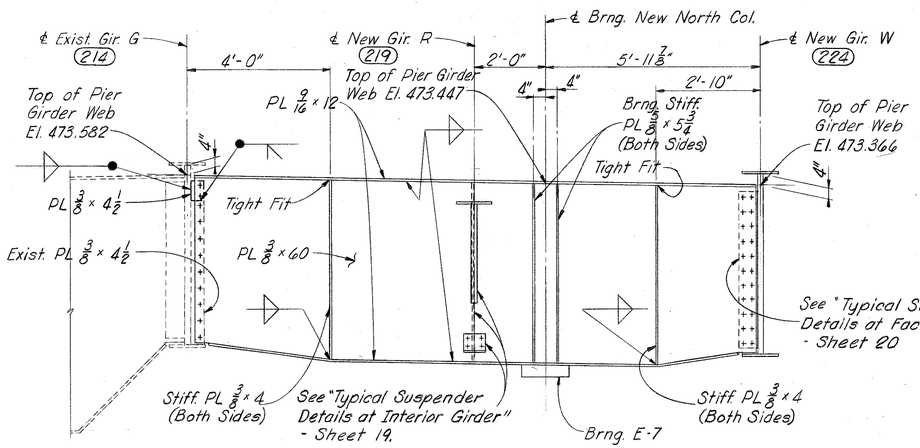


PIER GIRDER 128E

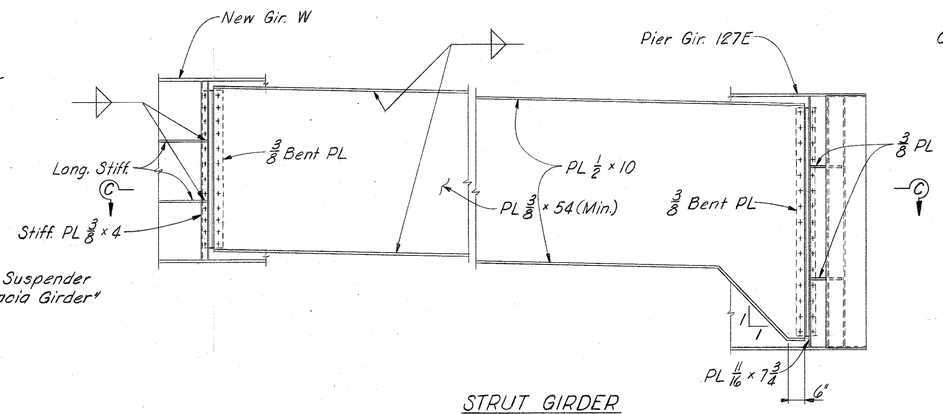


STRUT GIRDER

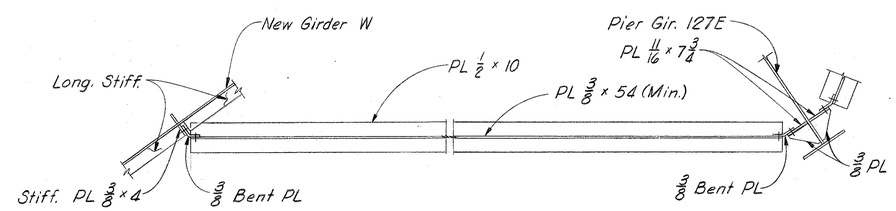


SECTION C-C

NOTES:

For Intermediate Stiffener Details see Sht. 17.
For Bearing Stiffener Details see Sheet 14.
(213) - indicates point shown on Framing Plan, Sheets 9 and 10.
For additional notes see Sheet 11.

SHEET 16

PIER GIRDERS AND STRUT GIRDER
STRUCTURAL STEEL

**COMMONWEALTH OF KENTUCKY**
BUREAU OF HIGHWAYS
FRANKFORT
COUNTY OF
**JEFFERSON**
**LOUISVILLE-LEXINGTON**
ROAD
STATION 267+00 — P. E. PROJECT NO. 164-2(92)

| CONSTRUCTION PROJECT NO. | MAINTENANCE PROJECT NO. | DRAWING NO. |
|---|---|---|
| | | 19238 |

| | | | |
|---|---|---|---|
| DESIGNED BY DMB | CHECKED BY RBS | DATE 2/75 | REVISED |
| DETAILED BY ELW | CHECKED BY DMB | DATE 3-75 | REVISED |
| TRACED BY | CHECKED BY | DATE | REVISED |

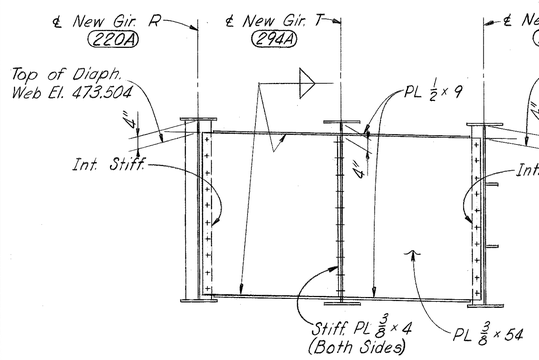


DIAPHRAGM D-3

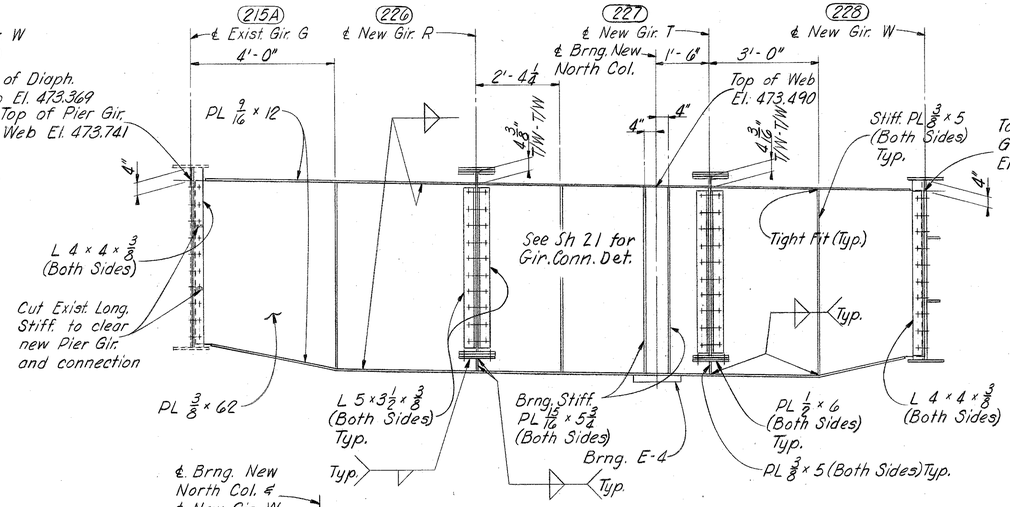


PIER GIRDER 129A

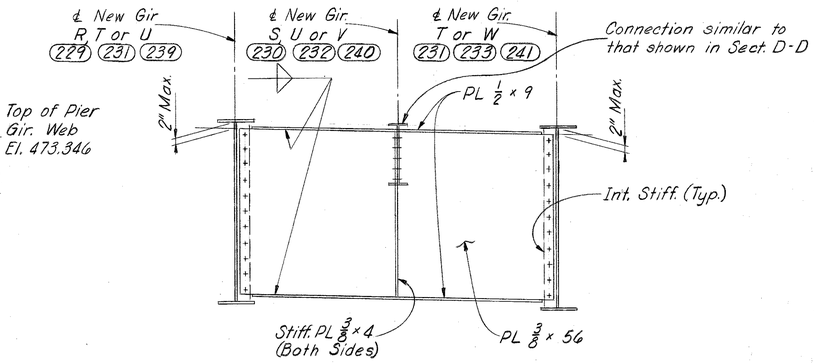


DIAPHRAGM D-7

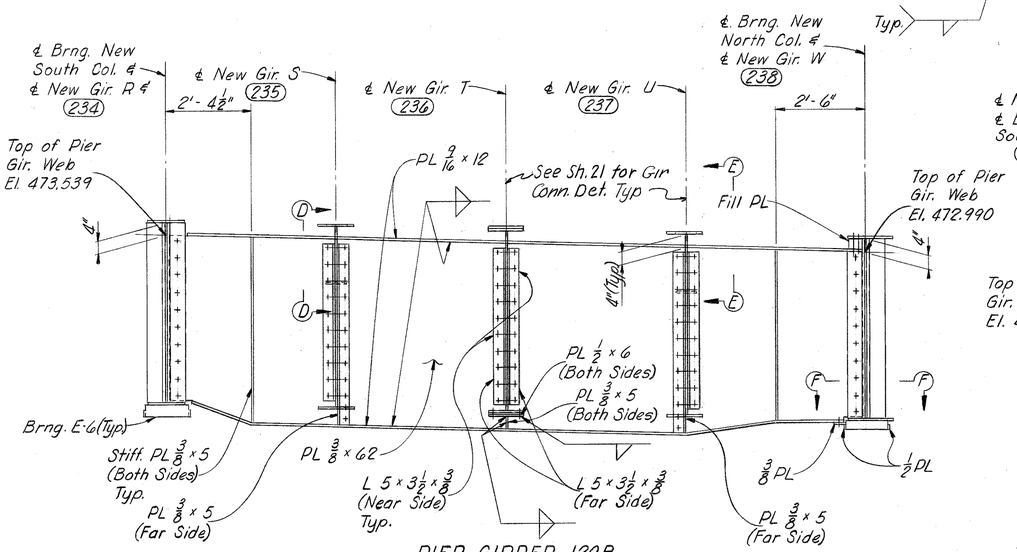


PIER GIRDER 129B

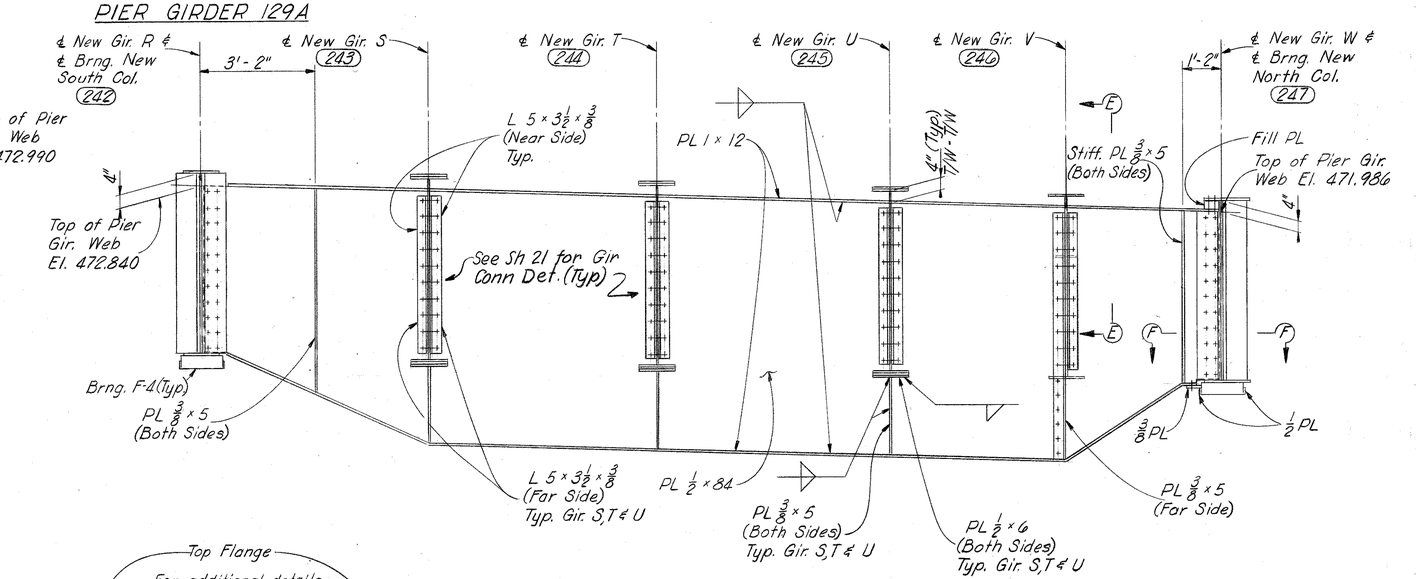


PIER GIRDER 130A

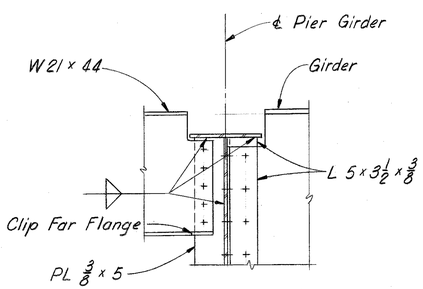


SECTION D-D
SECTION E-E (Opp. Hand)

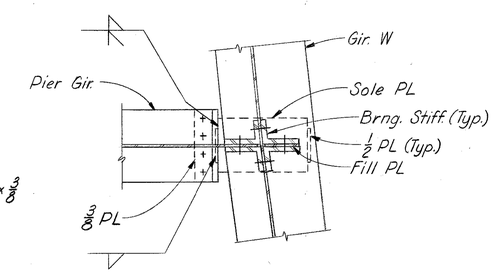


SECTION F-F

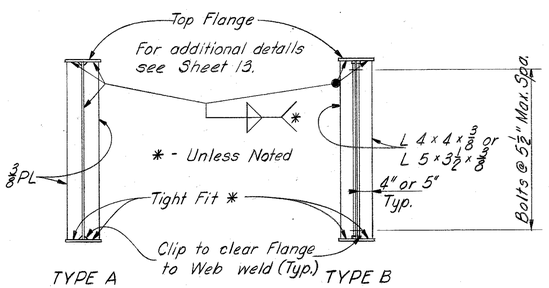


INTERMEDIATE STIFFENER DETAILS FOR DIAPHRAGMS AND PIER GIRDERS

Intermediate Stiffeners shall be Type A unless construction conditions require field attachment, then Type B shall be used. Type B shall have outstanding leg equal to detailed Type A.

NOTES:

(220A) - indicates point shown on Framing Plan, Sheets 9 and 10.

For Bearing Stiffener Details see Sheet 14.

For additional notes see Sheet 11.

SHEET 17

DIAPHRAGMS AND PIER GIRDERS

STRUCTURAL STEEL

COMMONWEALTH OF KENTUCKY
BUREAU OF HIGHWAYS
FRANKFORT
COUNTY OF
JEFFERSON
LOUISVILLE-LEXINGTON ROAD

STATION 267+00 | P. E. PROJECT NO. 164-2(92)

| CONSTRUCTION PROJECT NO. | MAINTENANCE PROJECT NO. | DRAWING NO. |
|---|---|---|
| | | 19238 |

UPDATE DATE
LETTING DATE

| | | | |
|---|---|---|---|
| DESIGNED BY DJB | CHECKED BY CHH | DATE 2/75 | REVISED |
| DETAILED BY EW | CHECKED BY DMB | DATE 3/75 | REVISED |
| TRACED BY | CHECKED BY | DATE | REVISED |

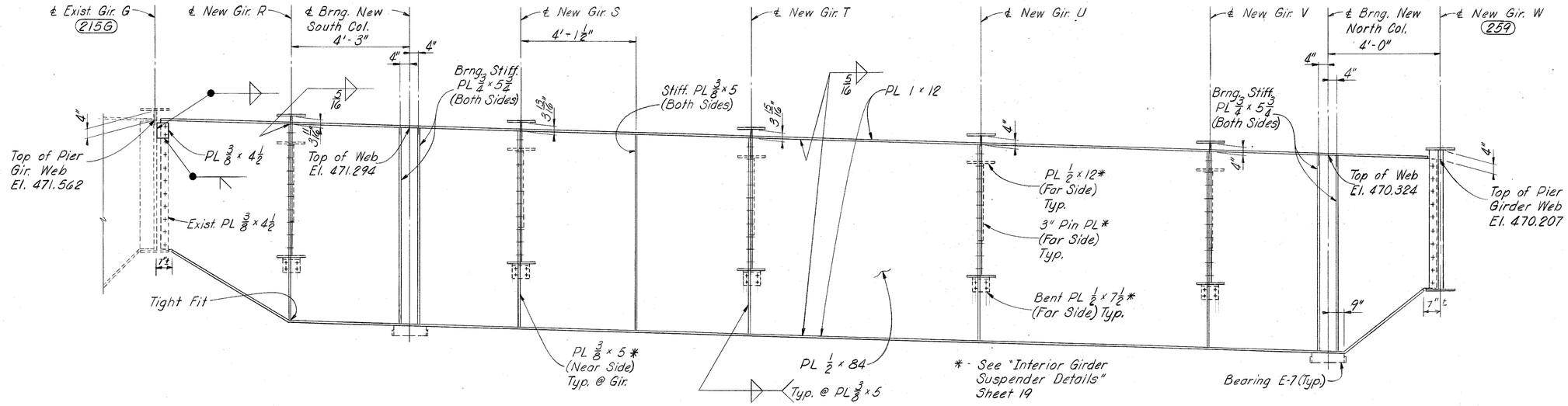


PIER GIRDER 131E

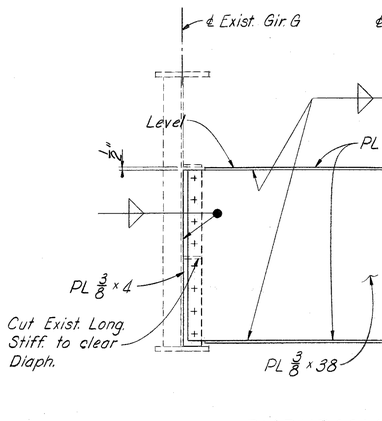


DIAPHRAGM D-1

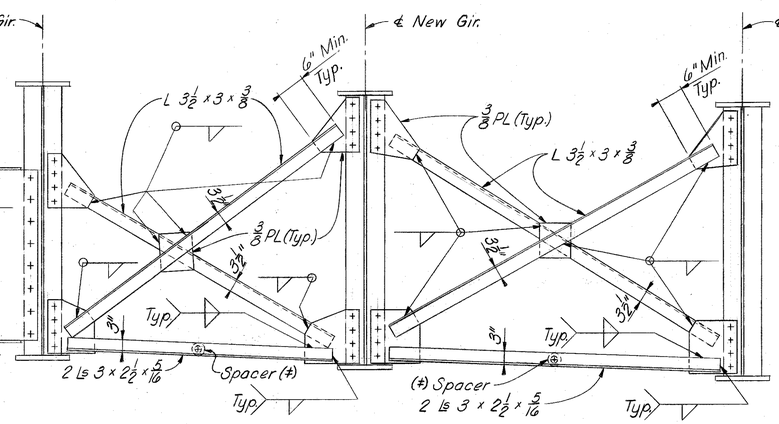


CROSSFRAME CF-1

CROSSFRAME CF-2

(±) - may be welded, for details see Sheet 20.

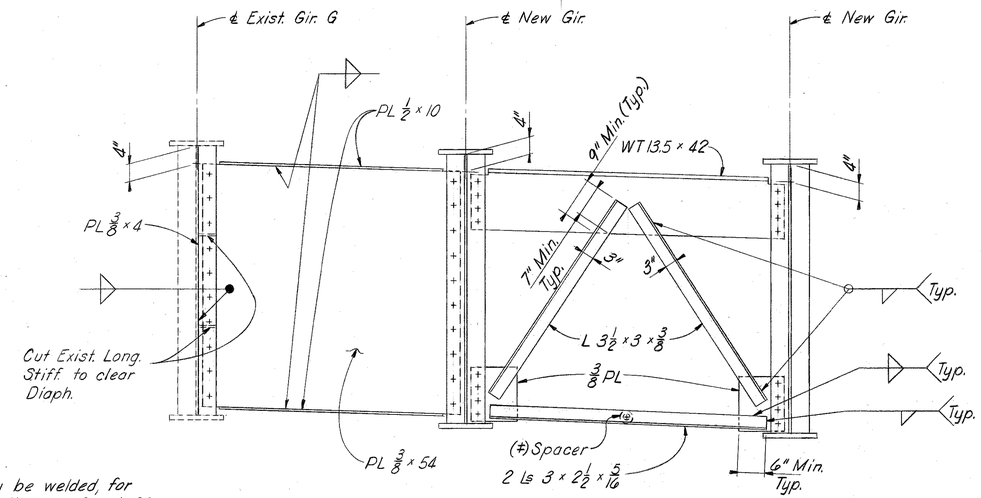


DIAPHRAGM D-2

CROSSFRAME CF-3

NOTES:

For Intermediate Stiffener Details see Sht. 17.
For Bearing Stiffener Details see Sheet 14.
(215G) - indicates point shown on Framing Plan, Sheets 9 and 10.
For additional notes see Sheet 11.

SHEET 18

DIAPHRAGMS AND PIER GIRDERS

STRUCTURAL STEEL

**COMMONWEALTH OF KENTUCKY**
BUREAU OF HIGHWAYS
FRANKFORT
COUNTY OF
**JEFFERSON**
LOUISVILLE-LEXINGTON
ROAD

STATION 267+00 | P. E. PROJECT NO. I64-2(92)

| CONSTRUCTION PROJECT NO. | MAINTENANCE PROJECT NO. | DRAWING NO. |
|---|---|---|
| | | 19238 |

UPDATE DATE
LETTING DATE

| | | | |
|---|---|---|---|
| DESIGNED BY DMB | CHECKED BY CHH | DATE 2/75 | REVISED |
| DETAILED BY ECW | CHECKED BY DMB | DATE 3/75 | REVISED |
| TRACED BY | CHECKED BY | DATE | REVISED |

471.562

UPDATE DATE
LETTING DATE

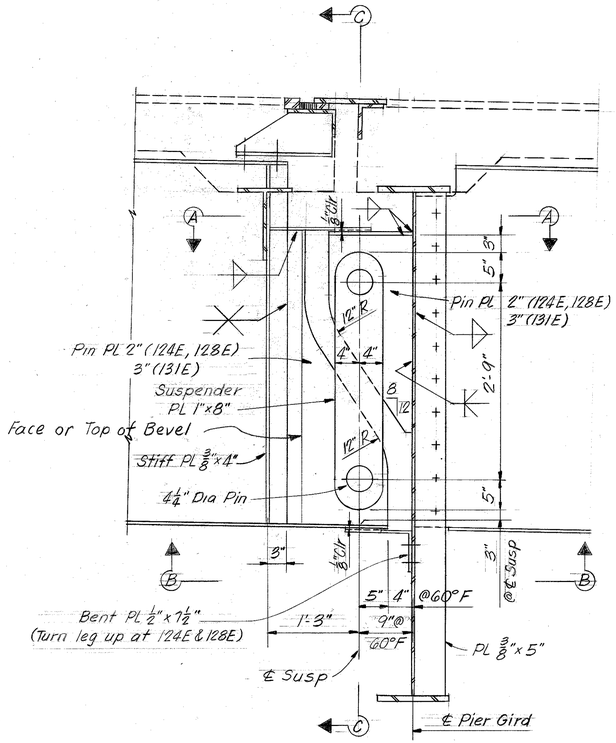


TYPICAL SUSPENDER DETAIL AT INTERIOR GIRDER

(Drawn at Pier Gird 131E, Girds R thru V
Pier Gird 128E, Gird R similar
Pier Gird 124E, Gird W similar)

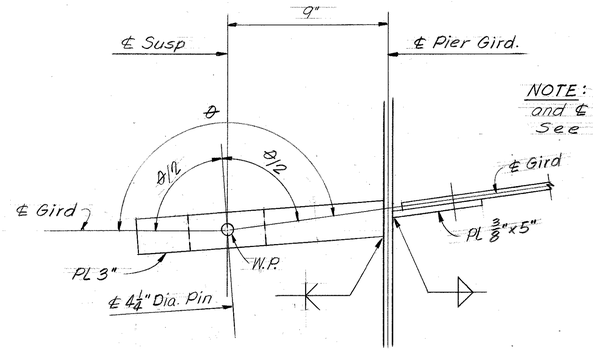


NOTE: Angle btw ℄ Gird. and ℄ Susp varies. See Sht. 10.

GIRDERS R THRU V

(Pier Gird 128E, Gird R similar)

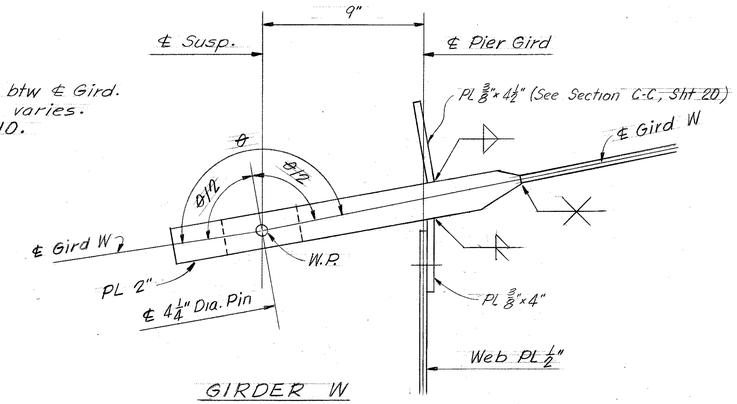


GIRDER W

SUSPENDER ALIGNMENT AT PIER GIRD 131E

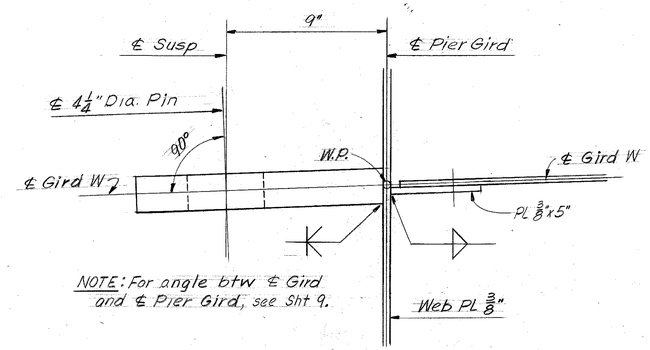


NOTE: For angle btw ℄ Gird and ℄ Pier Gird, see Sht 9.

SUSPENDER ALIGNMENT AT PIER GIRD 124E

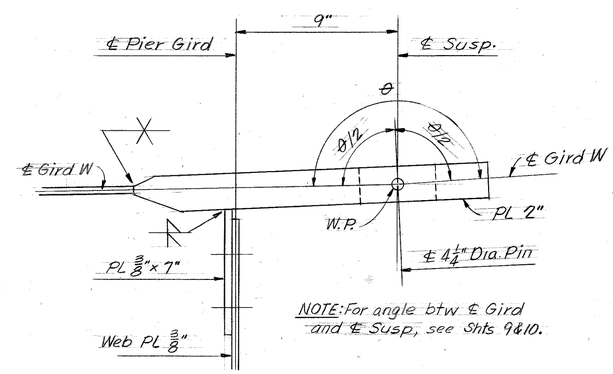


NOTE: For angle btw ℄ Gird and ℄ Susp, see Shts 9 & 10.

SUSPENDER ALIGNMENT AT PIER GIRD 128E

GIRD W

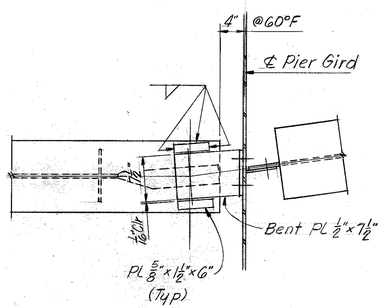


SECTION B-B

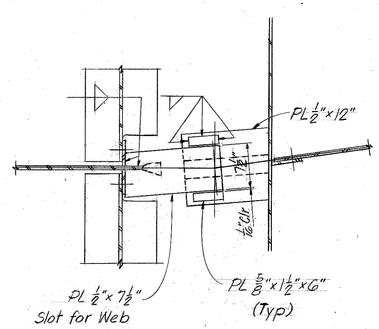


SECTION A-A

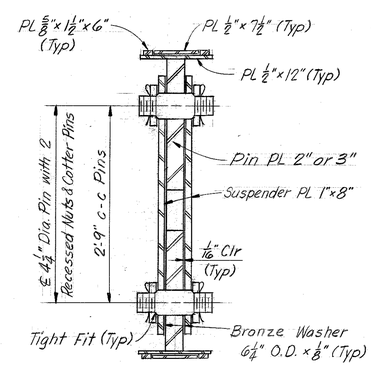


SECTION C-C

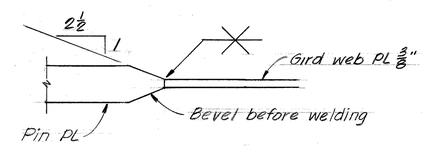


SHOP WEB SPLICE DETAIL

For Notes see Sht 11.

SUSPENDER DETAILS
STRUCTURAL STEEL

SHEET 19

**COMMONWEALTH OF KENTUCKY**
BUREAU OF HIGHWAYS
FRANKFORT
COUNTY OF
**JEFFERSON**
LOUISVILLE-LEXINGTON
ROAD
STATION 267 + 00 — P. E. PROJECT NO. I64-2(92)

| CONSTRUCTION PROJECT NO. | MAINTENANCE PROJECT NO. | DRAWING NO. |
|---|---|---|
| | | 19238 |

| | | | |
|---|---|---|---|
| DESIGNED BY RBS | CHECKED BY DMB | DATE 2-75 | REVISED |
| DETAILED BY DMB | CHECKED BY ELW | DATE 4-75 | REVISED |
| TRACED BY | CHECKED BY | DATE | REVISED |

UPDATE DATE
LETTING DATE

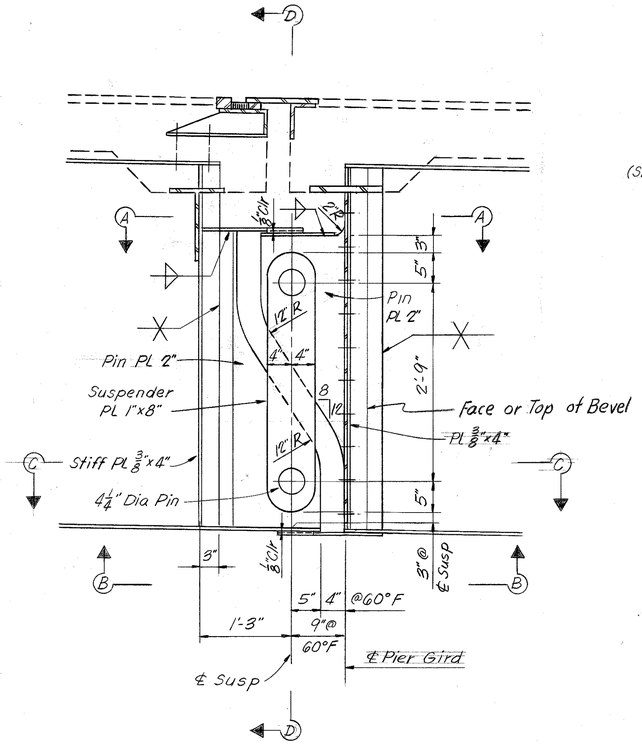


TYPICAL SUSPENDER DETAIL AT FASCIA GIRDER

(Drawn at Pier Gird 18IE; Pier Gird 12BE similar)
Section D-D similar to Section C-C, Sht. 19

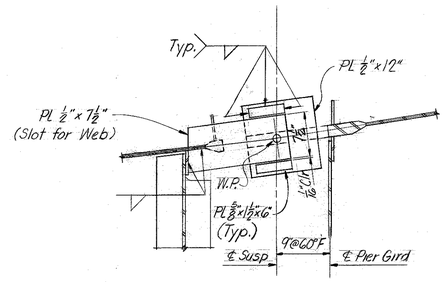


SECTION A-A

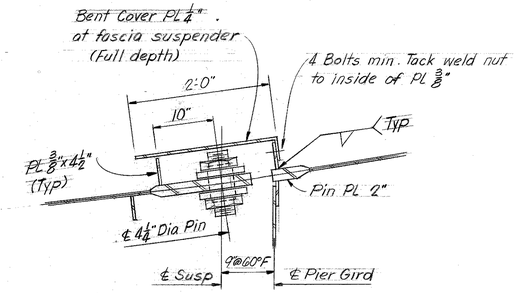


SECTION C-C

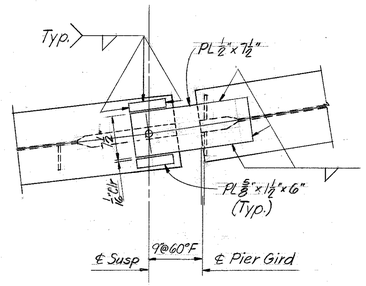


SECTION B-B

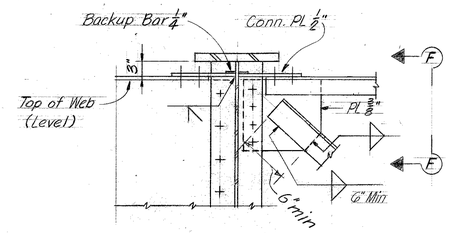


DETAIL A

(Detail B similar)
(Bott. Flg similar)

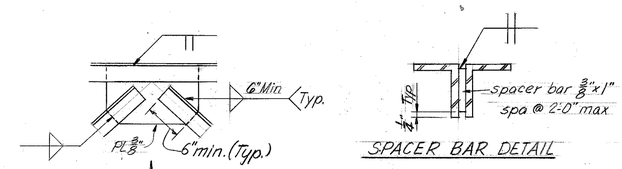


SPACER BAR DETAIL

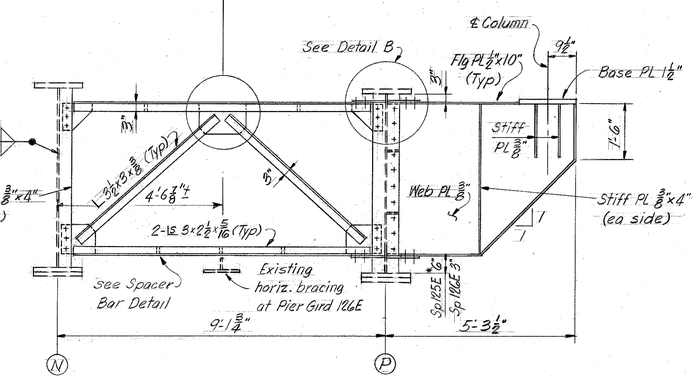


*Verify by field measurement to clear horiz. bracing at Pier Gird 12BE

SIGN SUPPORT BRACKET & CROSSFRAME CF-4
SOUTH FASCIA

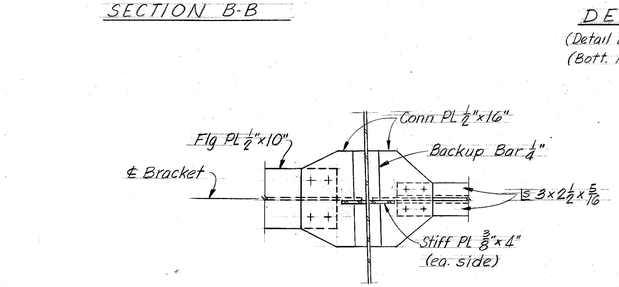


PLAN-BRACKET FLANGE CONN.

(Top shown; Bott. similar)

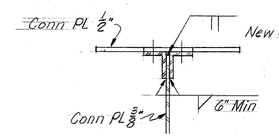


SECTION F-F

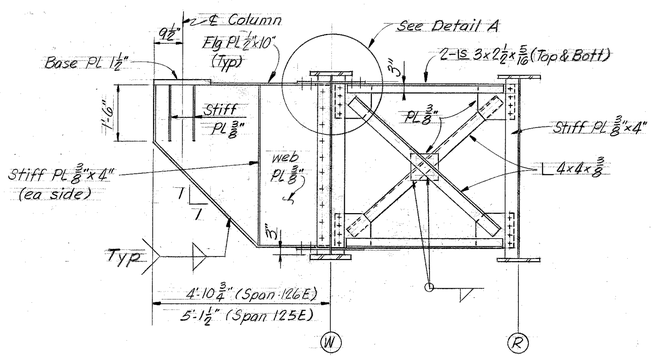


SIGN SUPPORT BRACKET & CROSSFRAME CF-5
NORTH FASCIA

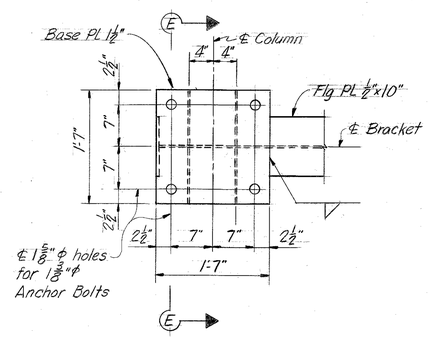


PLAN-COLUMN BASE PLATE

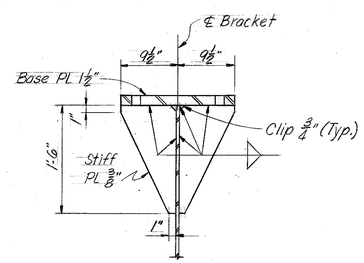


SECTION E-E

For Notes see Sht 11.

SUSPENDER & SIGN SUPPORT BRACKET DETAILS
STRUCTURAL STEEL

SHEET 20

**COMMONWEALTH OF KENTUCKY**
BUREAU OF HIGHWAYS
FRANKFORT
COUNTY OF
**JEFFERSON**
LOUISVILLE-LEXINGTON
ROAD
STATION 267+00 P. E. PROJECT NO. I64-2(92)

| CONSTRUCTION PROJECT NO. | MAINTENANCE PROJECT NO. | DRAWING NO. |
|---|---|---|
| | | 19238 |

| | | | |
|---|---|---|---|
| DESIGNED BY RBS | CHECKED BY DMB | DATE 2-75 | REVISED |
| DETAILED BY DMB | CHECKED BY ECW | DATE 4/75 | REVISED |
| TRACED BY | CHECKED BY | DATE | REVISED |

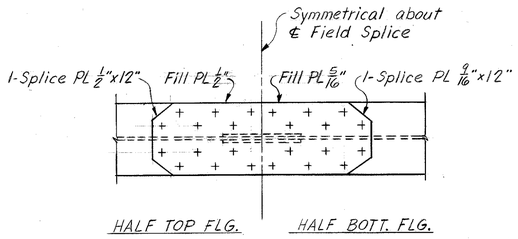


FIELD SPLICE ①

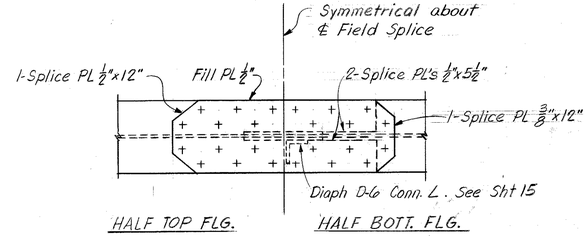


FIELD SPLICE ②

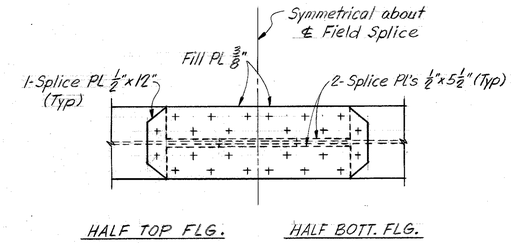


FIELD SPLICE ③

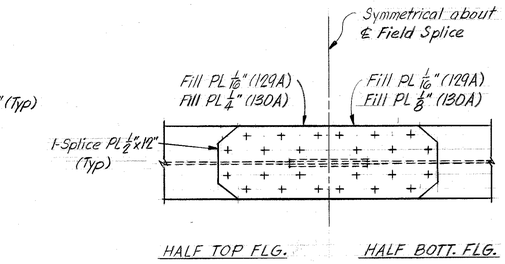


FIELD SPLICE ④

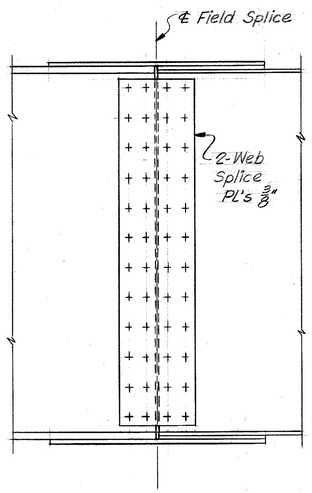


FIELD SPLICE ①, ②, ③, & ④
TYPICAL WEB SPLICE

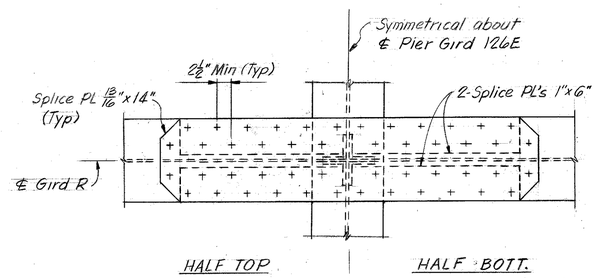


GIRD. R FLANGE SPLICE AT PIER GIRD. 126E

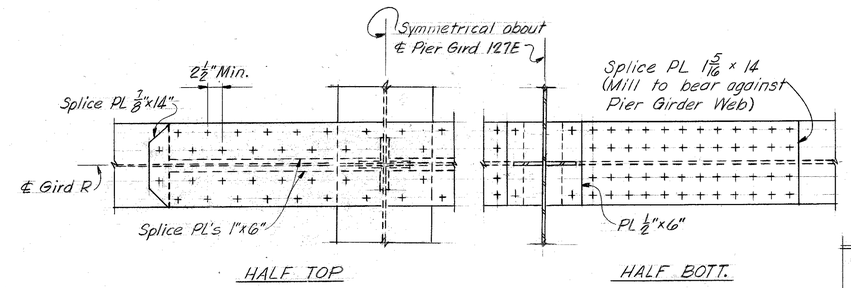


GIRD. R FLANGE SPLICE AT PIER GIRD. 127E

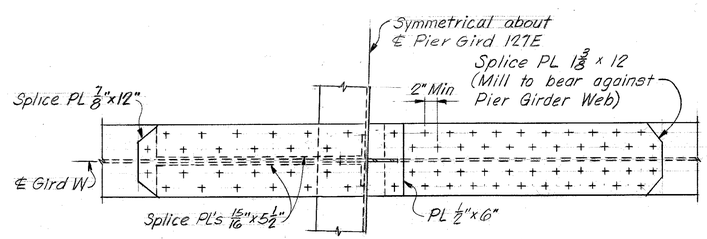


GIRD. W FLANGE SPLICE AT PIER GIRD. 127E

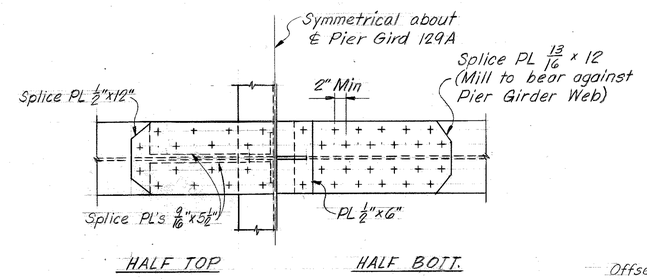


GIRD R FLANGE SPLICE AT PIER GIRD 129A

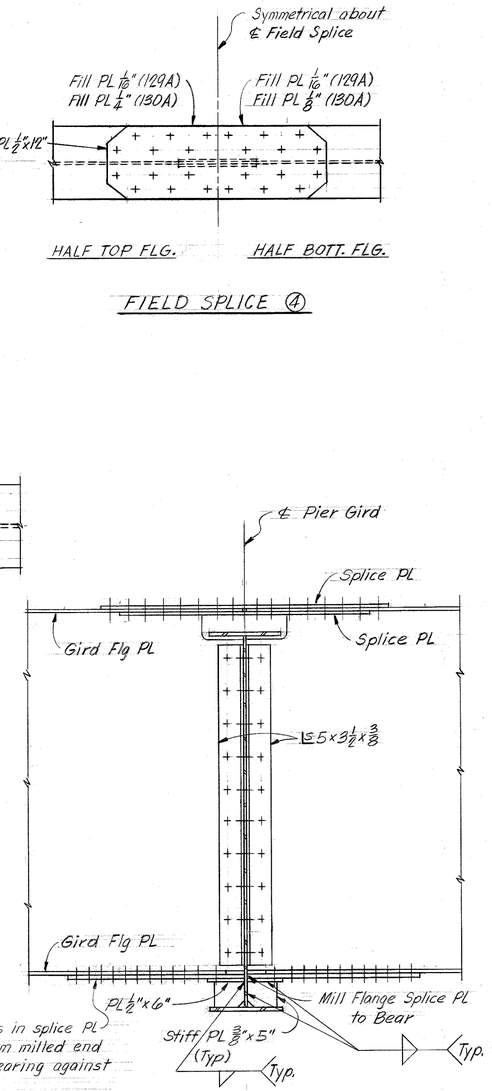


TYPICAL PIER GIRD SECTION
AT GIRD FLANGE SPLICE
(DRAWN FOR 129A
OTHERS SIMILAR)

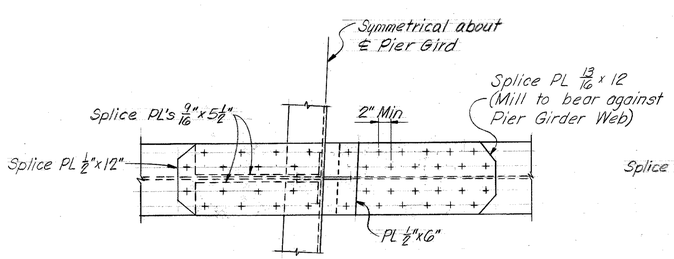


GIRD. T FLANGE SPLICE AT PIER GIRD. 129A & 129B

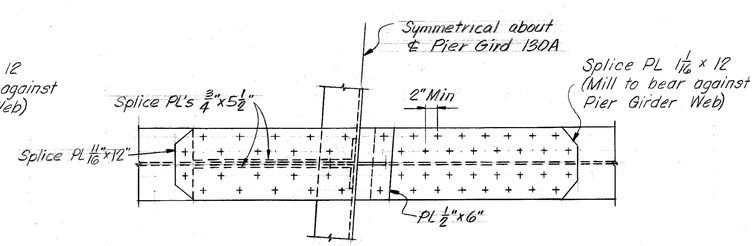


GIRDS. S, T, & U FLANGE SPLICE AT PIER GIRD. 130A

For Notes see Sht 11.

GIRDER SPLICES
STRUCTURAL STEEL

SHEET 21

**COMMONWEALTH OF KENTUCKY**
BUREAU OF HIGHWAYS
FRANKFORT
COUNTY OF
**JEFFERSON**
**LOUISVILLE-LEXINGTON**
ROAD
STATION 267+00 P. E. PROJECT NO. [64-2(92)

| CONSTRUCTION PROJECT NO. | MAINTENANCE PROJECT NO. | DRAWING NO. |
|---|---|---|
| | | 19238 |

UPDATE DATE
LETTING DATE

DESIGNED BY DMB CHECKED BY RBS DATE 11/72 REVISED
DETAILED BY DMB CHECKED BY GLW DATE 10/75 REVISED
TRACED BY CHECKED BY DATE REVISED

UPDATE DATE
LETTING DATE

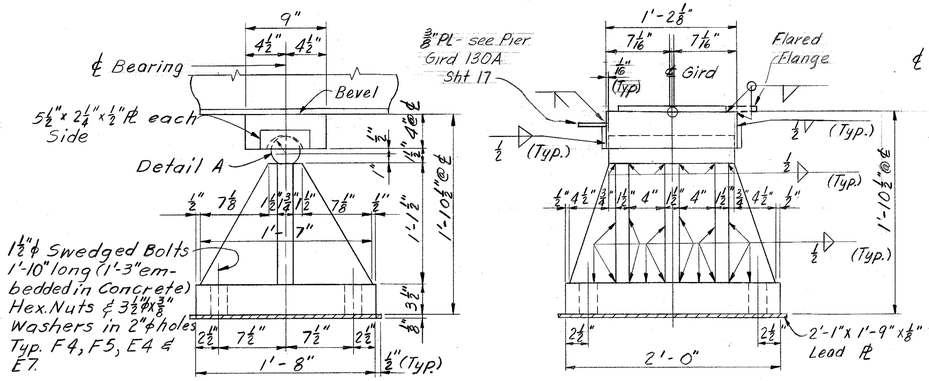


F4
Capacity = 465 Kips.
2 Required

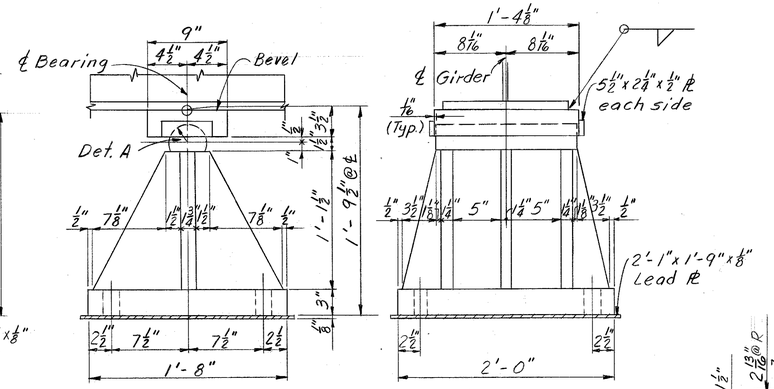


F5
Capacity = 340 Kips
1 Required

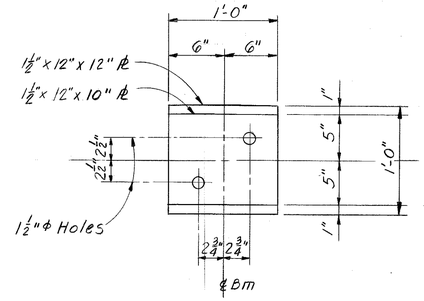


PLAN

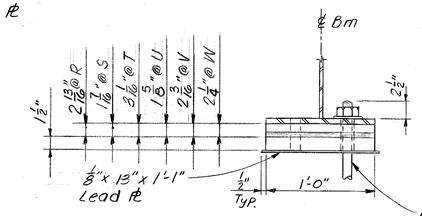


SECTION

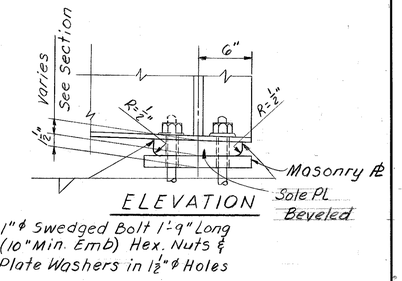


ELEVATION

BEARINGS AT END BENT 101 E
REACTION = 96 Kips
6 Required

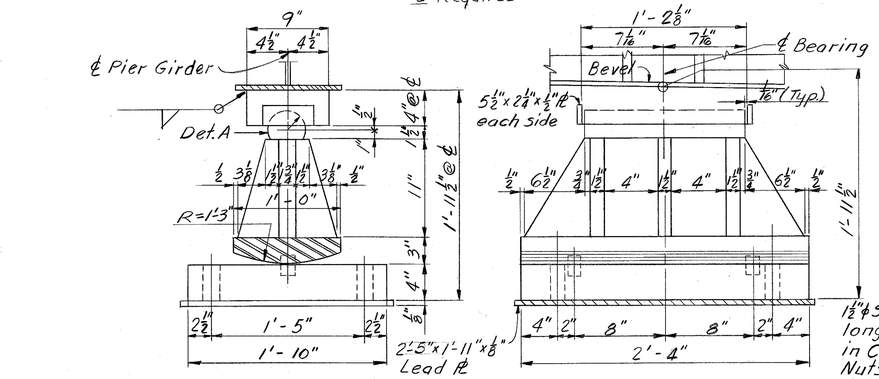


E4
Capacity = 480 Kips
1 Required

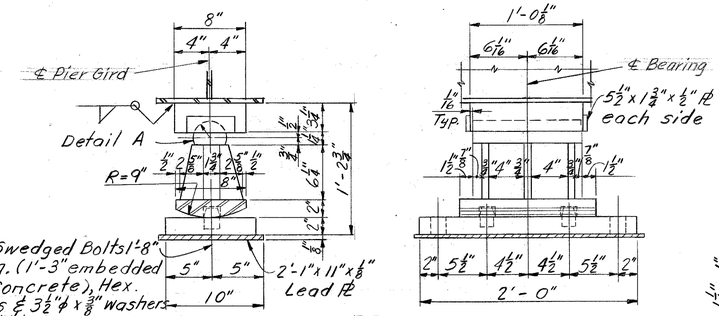


E5
Capacity = 130 Kips
1 Required

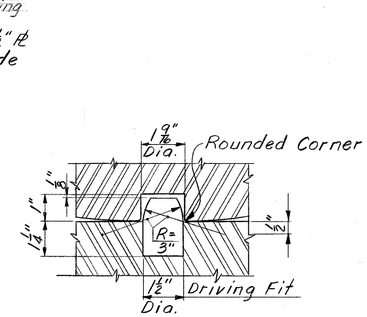


PINTLE AND RECESS DETAIL
(ASTM A-108)

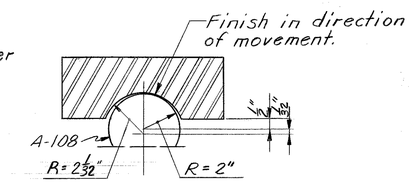


DETAIL A

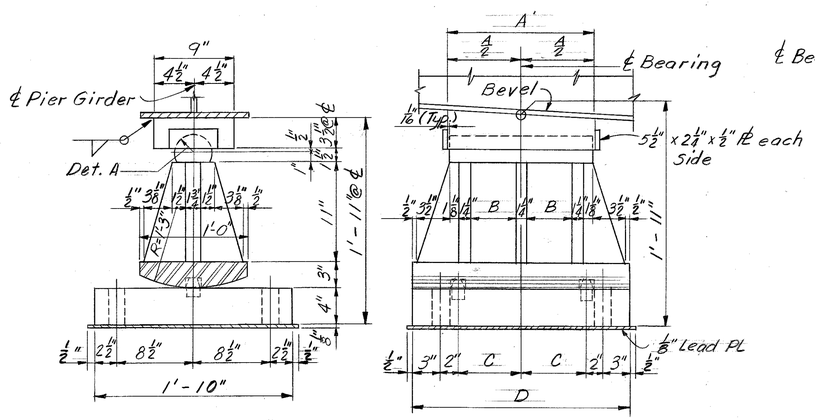


E7
Capacity = 395 Kips
4 Required

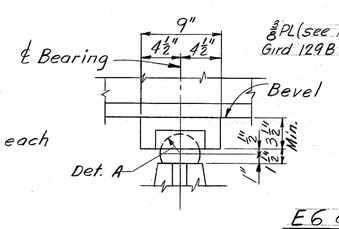


E6 & E8
Capacity = 395 Kips
2 Required E6
1 Required E8

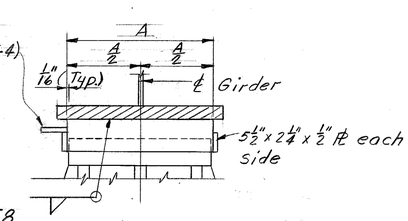


Note: Lower parts of this Bearing same as E7.

| VARIABLE DIMENSIONS | | | | |
|---|---|---|---|---|
| Bearing | A | B | C | D |
| E-6 | 1'-2⅛" | 4" | 6" | 1'-10 |
| E-7 | 1'-4⅛" | 5" | 7" | 2'-0 |
| E-8 | 1'-4⅛" | 5" | 7" | 2'-0 |

Notes:
For location of Anchor Bolts see Substructure details. Anchor Bolt holes shall be drilled in the concrete ½" larger than the diameter of the bolts by the Superstructure Contractor who shall be responsible for keeping holes dry in freezing weather. After base plates are properly set and Anchor Bolts placed in drilled holes, molten lead shall be poured in holes and packed until holes are completely filled flush to top of Base Plates. At time of setting, Anchor Bolts are to be heated to a blue heat to assure free flow of lead to the bottom of the holes. The cost of drilling anchor bolt holes, furnishing lead and filling holes shall be incidental to and included in the lump sum bid for Structural Steel.

The cost of furnishing and installing the ⅛" lead PL shall be incidental to Structural Steel. (354 Lbs. Lead Plate)

The estimated wgt of Bearings is 13,100 lbs (Lead Plate not included).

All Structural Steel is A-36 unless noted.

BEARINGS
STRUCTURAL STEEL

SHEET 22

**COMMONWEALTH OF KENTUCKY**
BUREAU OF HIGHWAYS
**FRANKFORT**
**COUNTY OF**
# JEFFERSON
**LOUISVILLE-LEXINGTON**
**ROAD**

**STATION** 267+00 **P. E. PROJECT NO.** 164-2(92)

| CONSTRUCTION PROJECT NO. | MAINTENANCE PROJECT NO. | DRAWING NO. |
|---|---|---|
| | | 19238 |

DESIGNED BY DMB
DETAILED BY LEW
TRACED BY
CHECKED BY RBS DATE 1-75
CHECKED BY ELW DATE 4/75
CHECKED BY DATE
REVISED
REVISED
REVISED

UPDATE DATE
LETTING DATE

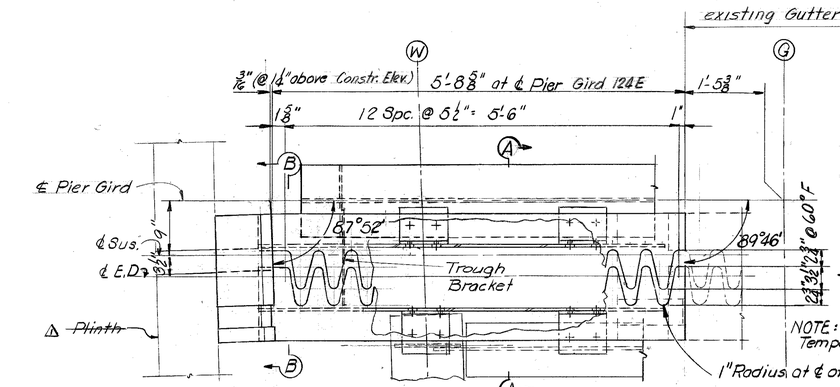


PLAN - PIER 124E

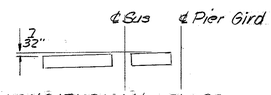


LONGITUDINAL SLOPE AT 124E

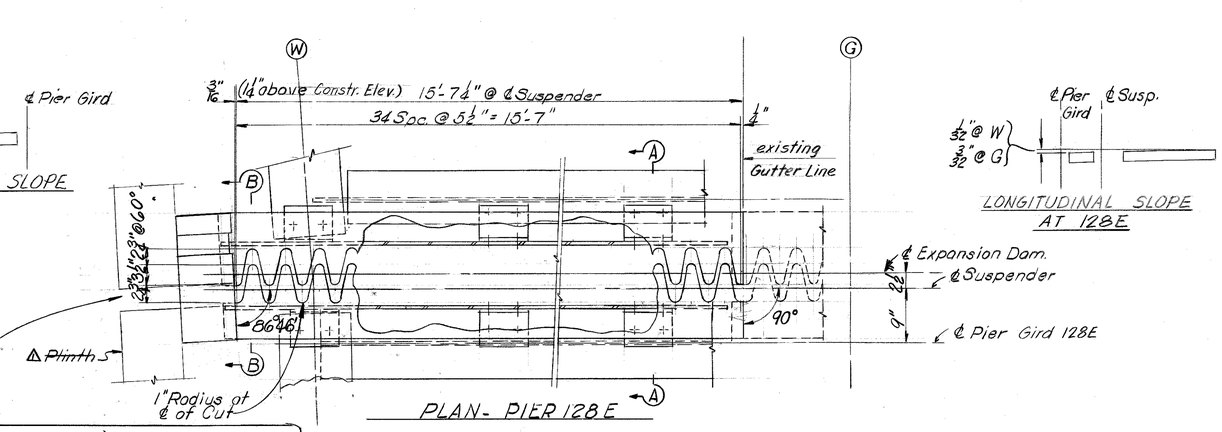


PLAN - PIER 128E

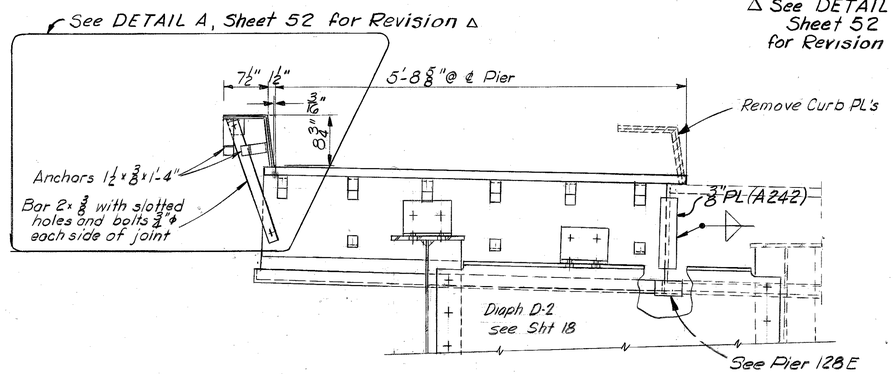


ELEVATION - PIER 124E

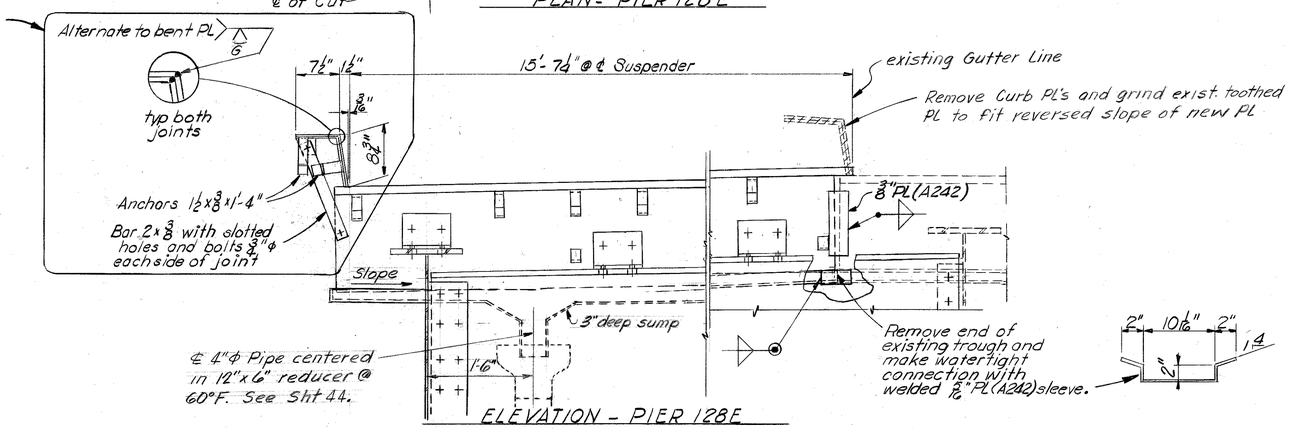


ELEVATION - PIER 128E

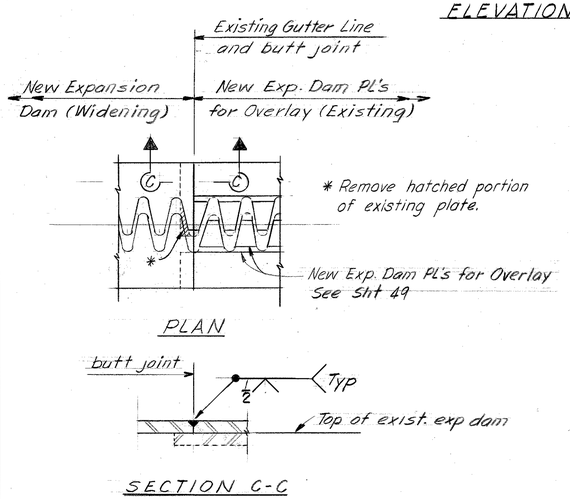


EXPANSION DAM BUTT JOINT BETWEEN WIDENING AND OVERLAY CONSTRUCTION

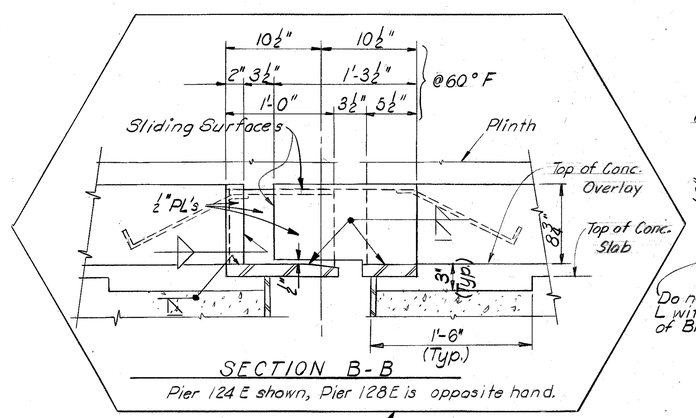


SECTION B-B

Pier 124E shown, Pier 128E is opposite hand.

See SECTION B B Sheet 52 for Revision △

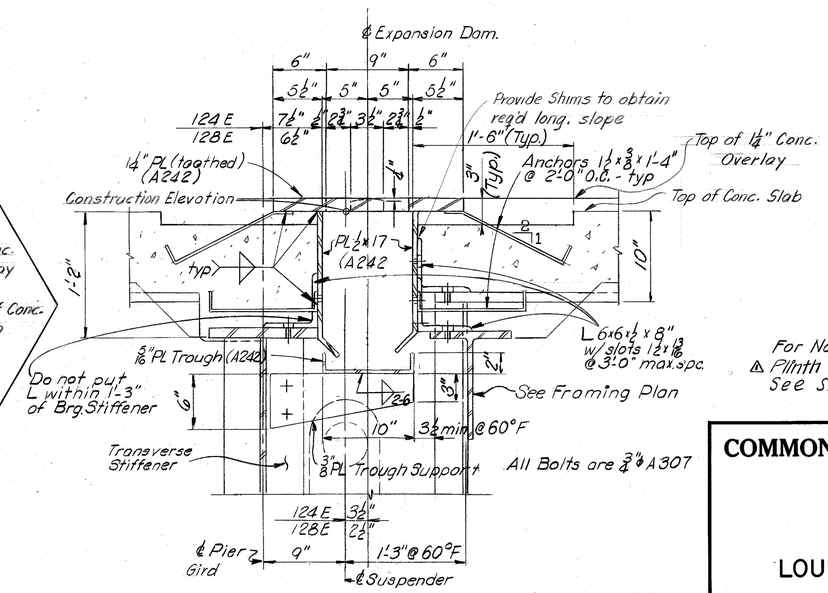


SECTION A-A

For Notes see sheet 24
△ Plinth Revised to G.M. Barrier See Sh 52.

EXPANSION DAMS 124E & 128E
STRUCTURAL STEEL

SHEET 23

△ Indicates Revision for G.M. Barrier

| | | | |
|---|---|---|---|
| DESIGNED BY | | REVISED | DATE 7/75 |
| DETAILED BY RBS | CHECKED BY | REVISED | DATE |
| TRACED BY | CHECKED BY | REVISED | DATE |

**COMMONWEALTH OF KENTUCKY**
BUREAU OF HIGHWAYS
FRANKFORT
COUNTY OF
**JEFFERSON**
LOUISVILLE-LEXINGTON
ROAD
STATION 267+00 P. E. PROJECT NO. I64-2(92)

| CONSTRUCTION PROJECT NO. | MAINTENANCE PROJECT NO. | DRAWING NO. |
|---|---|---|
| | | 19238 |

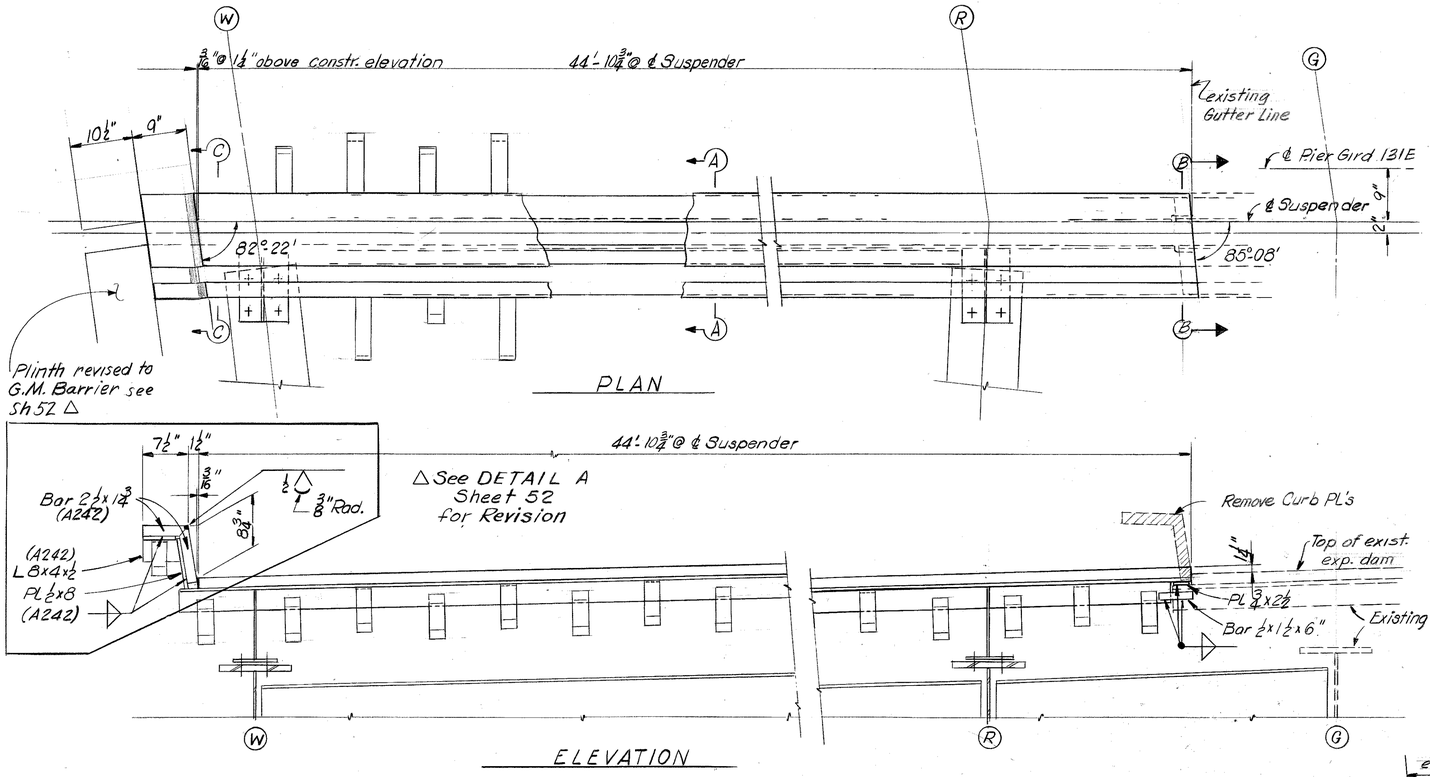


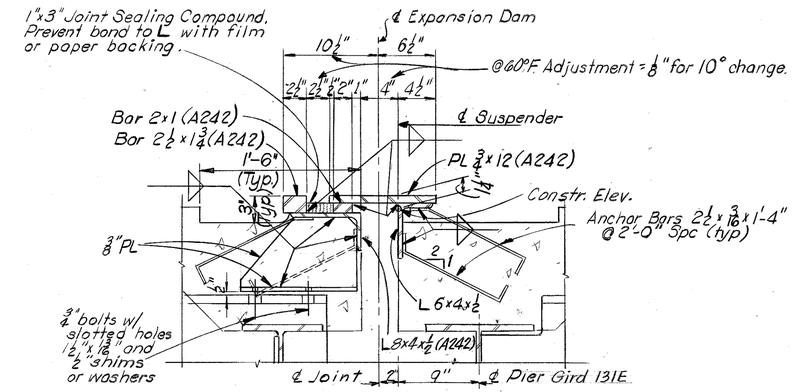


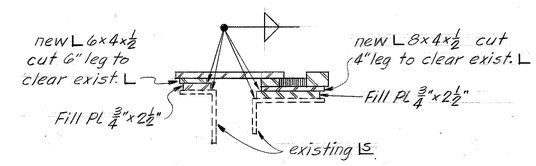


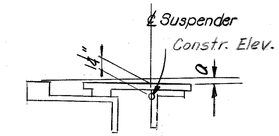


a = 1/2" at old G.L.
a = 5/16" at Lane Line (see Sht 32)
a = 11/32" at new G.L.

LONGITUDINAL SLOPE AT PIER GIRD 131E

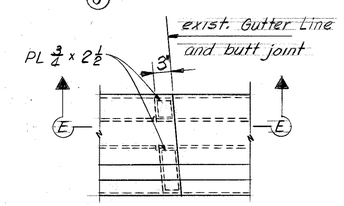


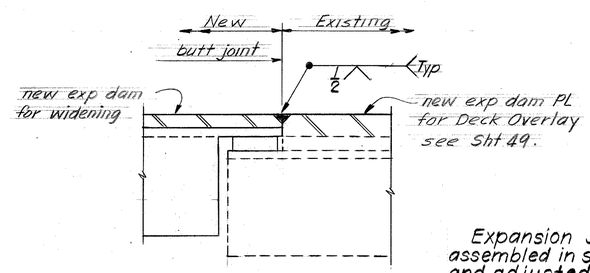


EXP. DAM BUTT JOINT BTW WIDENING AND DECK OVERLAY

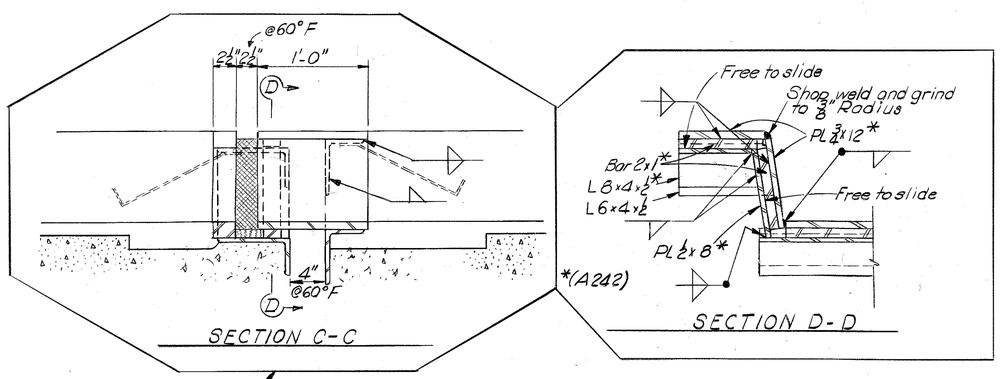


See SECTION C-C Sheet 52 for Revision △

NOTES

Materials - Steel - ASTM A36 Unless Noted
Bolts - ASTM A307
Joint Sealing Compound - See Spec. Prov. No 12

Elevations - The Expansion Dams are to be set 1 1/4" above the Construction Elevations. See Sht 34 for these elevations.

Construction - The dams shall be provided with a means of connection during construction to keep the two parts in their correct relative positions until the concrete has set. The connection shall have provisions for field adjustment for temperature.

Quantities include only details for the ramp widening. Quantities required for raising the existing expansion dams are elsewhere.

Estimated Wgt of Exp Dams and Armored Edges
△ A242 ~~6700~~ lbs 6706
△ A36 ~~3000~~ lbs 2967
1"x3" Jt Sealing Compound - 47 LF (incidental to Conc. Class "AA")

Expansion Joints shall be assembled in shop after fabrication and adjusted for grade, roadway cross slope or crown and fit of parts for free movement.

SHEET 24

EXPANSION DAM 131E
STRUCTURAL STEEL

**COMMONWEALTH OF KENTUCKY**
BUREAU OF HIGHWAYS
FRANKFORT
COUNTY OF
**JEFFERSON**
**LOUISVILLE-LEXINGTON ROAD**

STATION 267 +00 | P. E. PROJECT NO. 164-2(92)

| CONSTRUCTION PROJECT NO. | MAINTENANCE PROJECT NO. | DRAWING NO. |
|---|---|---|
| | | 19238 |

UPDATE DATE
LETTING DATE

△ Indicates Revision for G.M. Barrier

| | | | |
|---|---|---|---|
| DESIGNED BY | | CHECKED BY | DATE 7/75 |
| DETAILED BY | RBS | CHECKED BY | DATE 4-75 |
| TRACED BY | DMB | CHECKED BY | DATE |
| REVISED | | REVISED | |

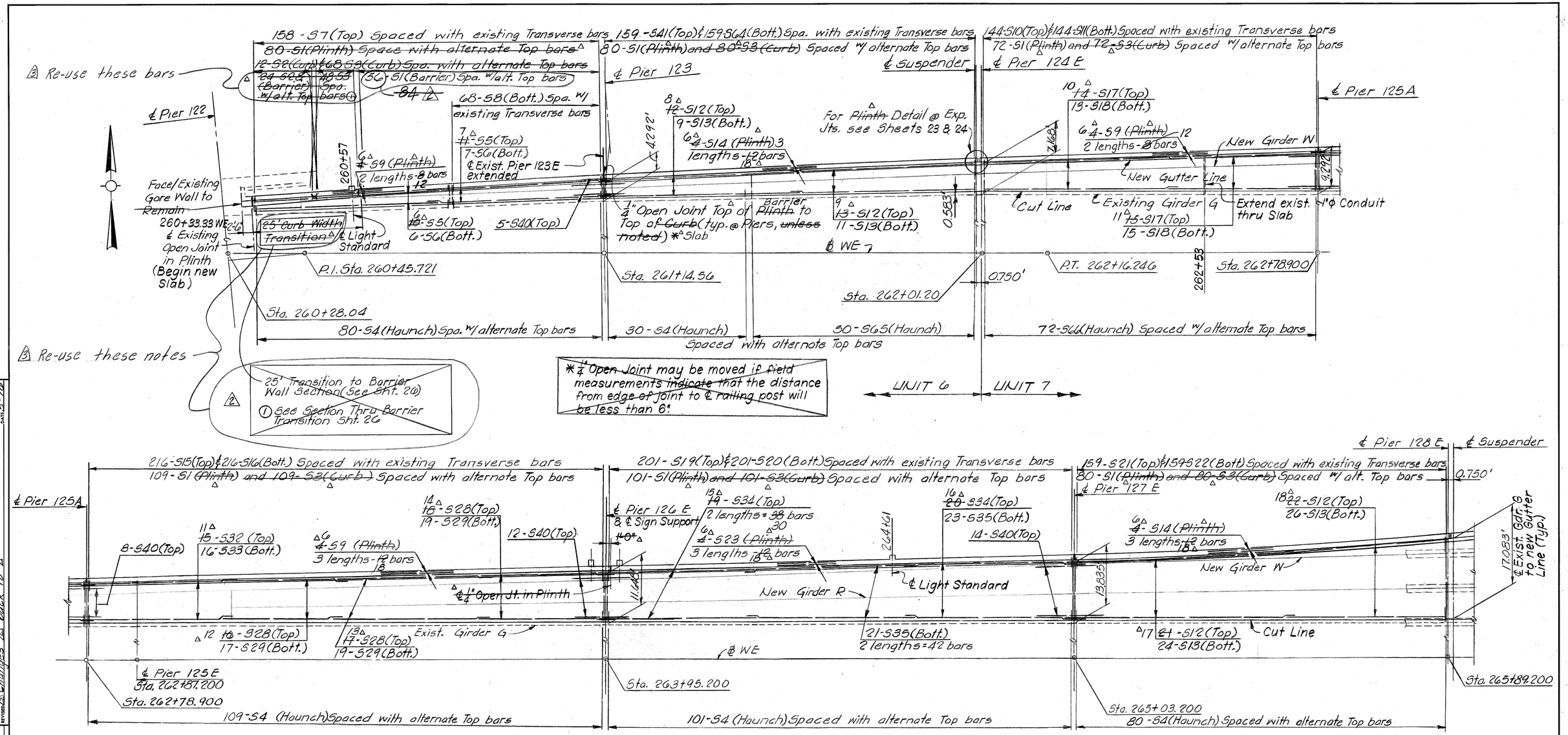


| SUPERSTRUCTURE QUANTITIES | | |
|---|---|---|
| Concrete, Class "AA" | 576 | cu. yds. |
| Steel Reinforcement | 153,120 | lbs. |
| Removal of Exist. Reinf. Conc. | 1 | lump sum * |
| ~~Bridge Railing, New~~ | ~~25~~ | ~~lin. ft.~~ |
| Bridge Railing, ~~Relocated~~ Removal | 890 | lin. ft. |
| Deck Drainage | 1 | lump sum |

632
167,747
168,039 — 167,747

* Includes approx. 890 lin. ft. of deck slab, curb & plinth

NOTES

For reinforcement details see Sht. 30 54
For concrete removal details see Sht. 27 53
For sign support details see Shts. 28 & 37-40 53
For deck drain & light standard details see Sht. 28
~~For handrail post spacing see Sht. 29~~
For deck cross sections see Sht. 27
For details of expansion dams see Shts. 23 & 24 & 52
For bridge lighting details see Shts. 42 & 43
For construction elevations see Shts. 31-34

DECK PLAN

Sheet No. 25

COMMONWEALTH OF KENTUCKY
BUREAU OF HIGHWAYS
FRANKFORT
COUNTY OF
JEFFERSON
LOUISVILLE-LEXINGTON
ROAD

25

STATION 267+00 | P. E. PROJECT NO. I64-2(92)

CONSTRUCTION PROJECT NO. | MAINTENANCE PROJECT NO. | DRAWING NO. 19238

UPDATE DATE
LETTING DATE

REVISED Δ Indicates Revision for G.M. Barrier DATE 7-75
REVISED Δ Changes Δ back to Δ DATE 3-76
REVISED DATE 5-76
REVISED DATE 4-75

DESIGNED BY DMB CHECKED BY RBS
DETAILED BY RHMc CHECKED BY PME
TRACED BY CHECKED BY

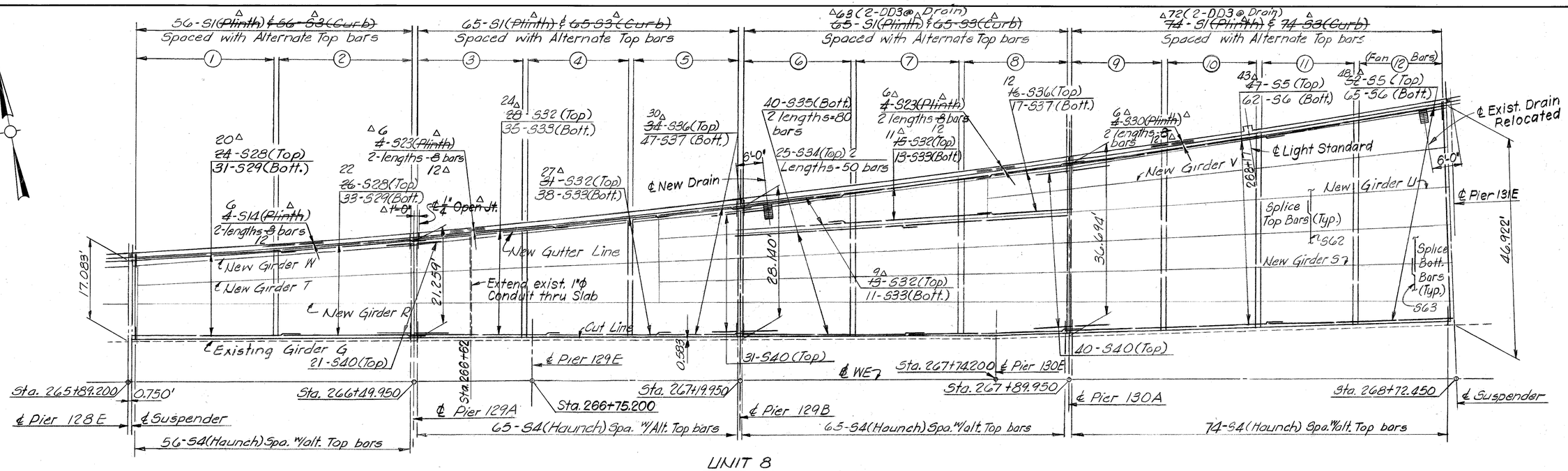


UNIT 8

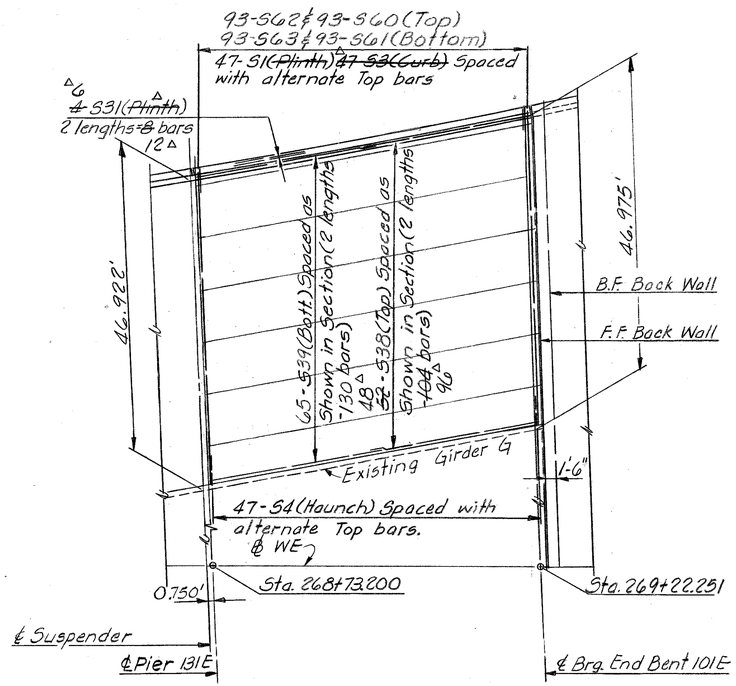


UNIT 9

① 56-S24(Top) 56-S26(Bott.)
② 55-S25(Top) 55-S27(Bott.)
③ 43-S42(Top) 43-S43(Bott.)
④ 43-S44(Top) 43-S45(Bott.)
⑤ 43-S46(Top) 43-S47(Bott.)
⑥ 44-S48(Top) 44-S49(Bott.)
⑦ 43-S50(Top) 43-S51(Bott.)
⑧ 43-S52(Top) 43-S53(Bott.)
⑨ 37-S54(Top) 37-S55(Bott.)
⑩ 37-S56(Top) 37-S57(Bott.)
⑪ 37-S58(Top) 37-S59(Bott.) and 37-S62(Top) 37-S63(Bott.)
⑫ 36-S60(Top) 36-S61(Bott.) and 36-S62(Top) 36-S63(Bott.)
(Space above bars with existing Transverse Steel)

| | |
|---|---|
| 1'-8" | #4 Bars |
| 2'-1" | #5 Bars |
| 2'-6" | #6 Bars |

MINIMUM BAR LAPS

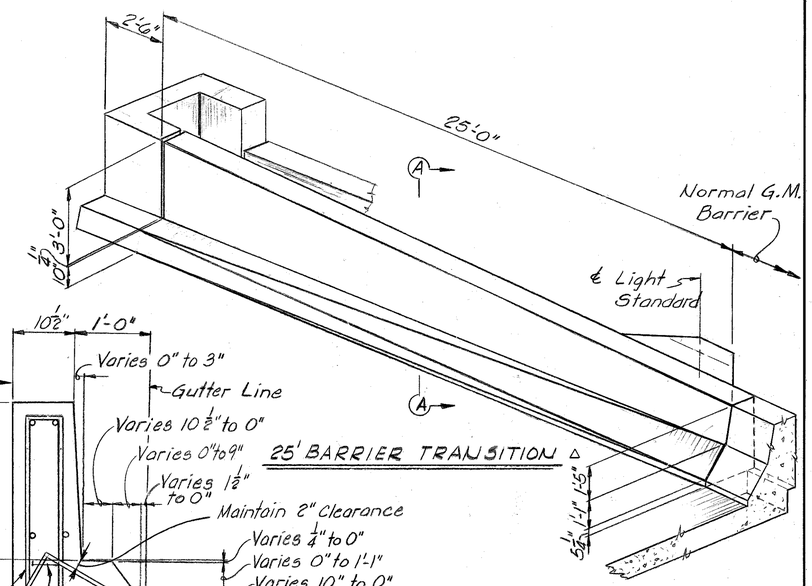


25' BARRIER TRANSITION

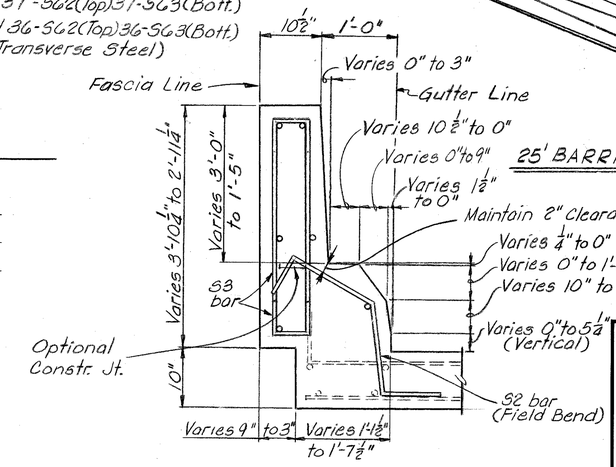


SECTION A-A

DECK PLAN

Sheet No. 26

**COMMONWEALTH OF KENTUCKY**
BUREAU OF HIGHWAYS
FRANKFORT
COUNTY OF
**JEFFERSON**
**LOUISVILLE-LEXINGTON**
ROAD

STATION 267+00 — P. E. PROJECT NO. I64-2(92)

CONSTRUCTION PROJECT NO. — MAINTENANCE PROJECT NO. — DRAWING NO. 19238

△ Indicates Revision for G.M. Barrier

DESIGNED BY DMB — CHECKED BY RBS — DATE 7-75
DETAILED BY PMC — CHECKED BY PME — DATE 4-75
TRACED BY — CHECKED BY — DATE
REVISED — DATE
REVISED — DATE
REVISED — DATE

UPDATE DATE
LETTING DATE

UPDATE DATE
LETTING DATE

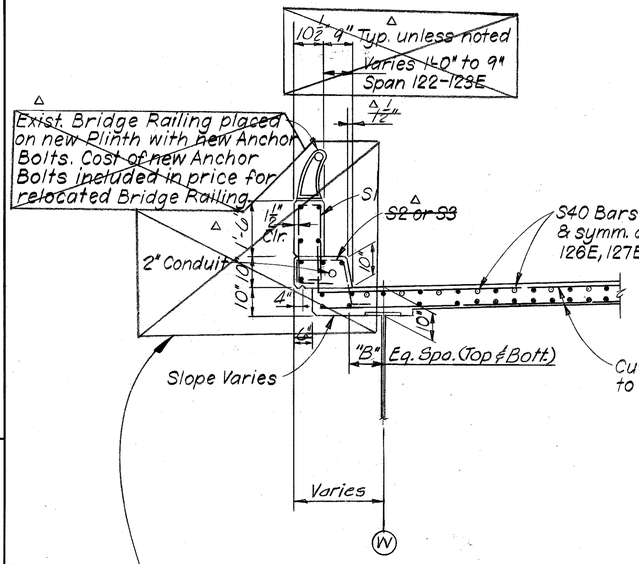


SECTION AT NEW FASCIA GIRDER W

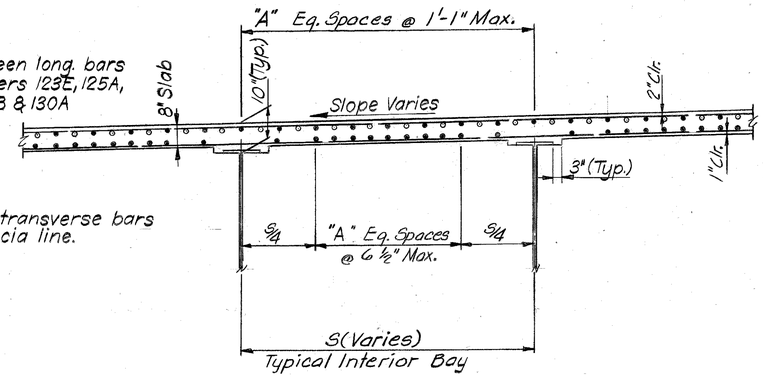


SECTION AT TYPICAL INTERIOR BAY

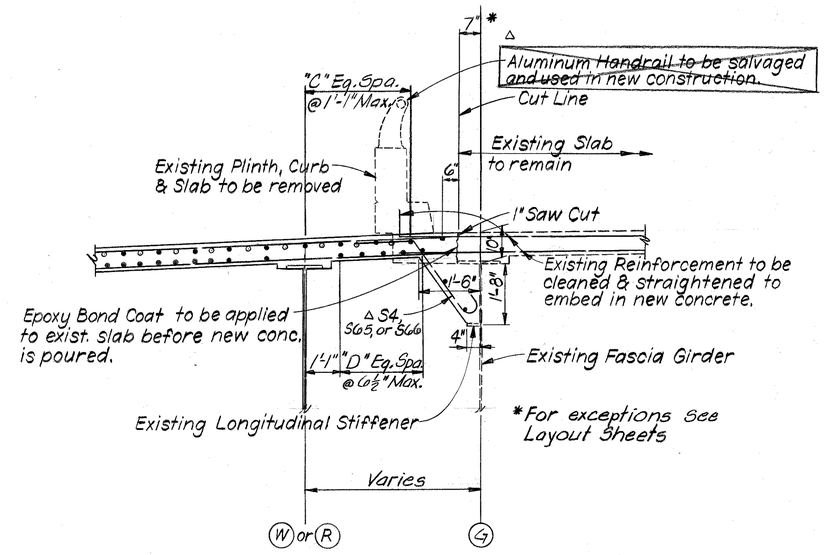


SECTION AT EXIST. FASCIA GIRDER G




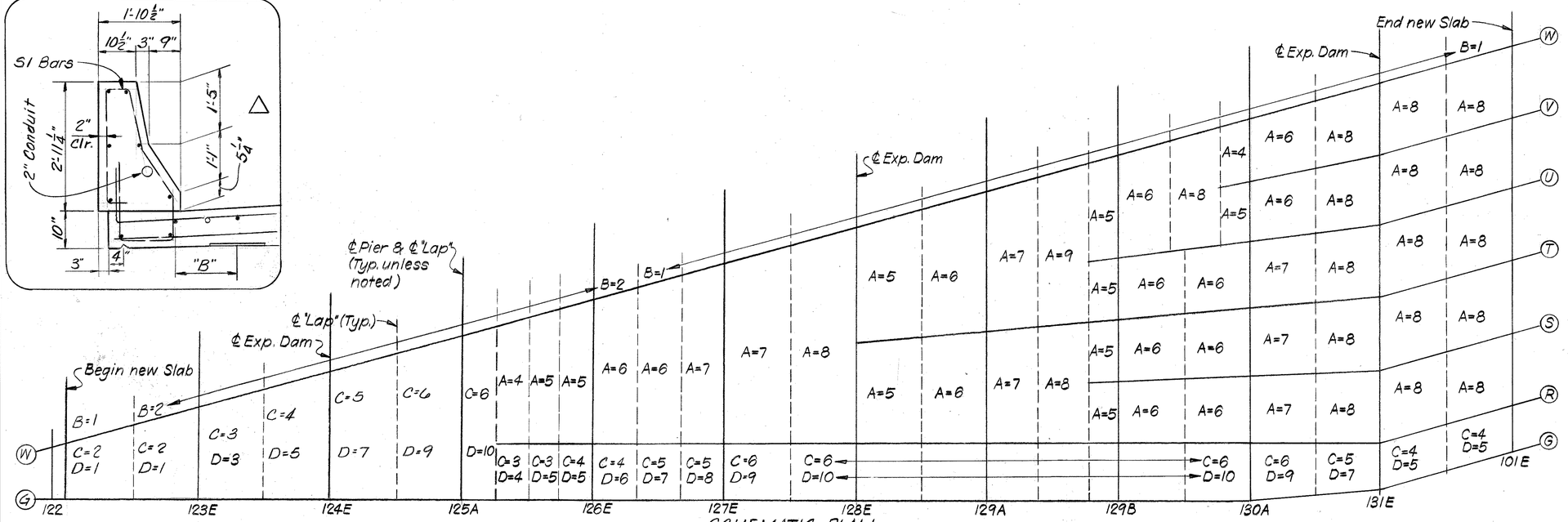


SCHEMATIC PLAN
TABLE OF VALUES OF A THRU D
(See Sections Above)

DECK SECTIONS

Sheet No. 27

**COMMONWEALTH OF KENTUCKY**
BUREAU OF HIGHWAYS
FRANKFORT
COUNTY OF
**JEFFERSON**
**LOUISVILLE-LEXINGTON**
ROAD
STATION 267+00 P. E. PROJECT NO. 164-2(92)

| CONSTRUCTION PROJECT NO. | MAINTENANCE PROJECT NO. | DRAWING NO. |
|---|---|---|
| | | 19238 |

△ Indicates Revision for G.M. Barrier

| | | | |
|---|---|---|---|
| DESIGNED BY DMB | CHECKED BY RBS | DATE 7-75 | REVISED DATE |
| DETAILED BY RHM | CHECKED BY PME | DATE 3-17-75 | REVISED DATE |
| TRACED BY | CHECKED BY | DATE | REVISED DATE |

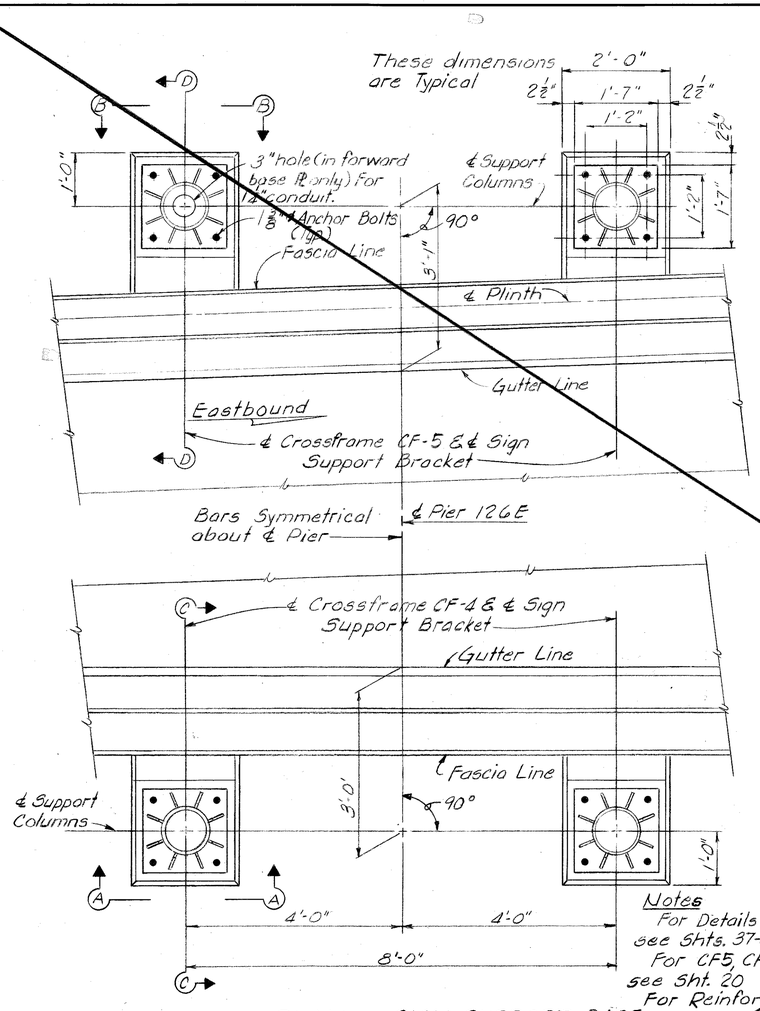


Notes
For Details of Overhead Sign Support see Shts. 37-40
For CF5, CF4, & Sign Support Brackets see Sht. 20
For Reinforcing Bar Details see Sht. 30

PLAN OF SIGN SUPPORT BASE

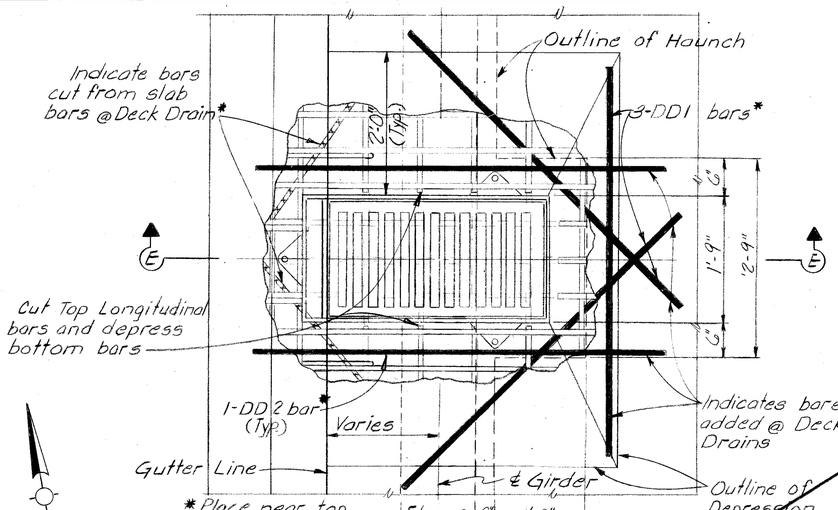


PLAN OF DECK DRAIN
For Location see Sht. 26

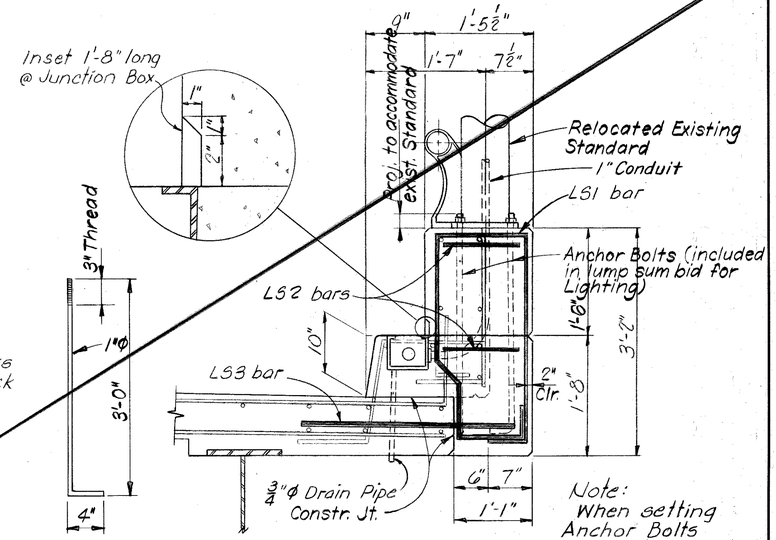


ANCHOR BOLT DETAIL

SECTION F-F

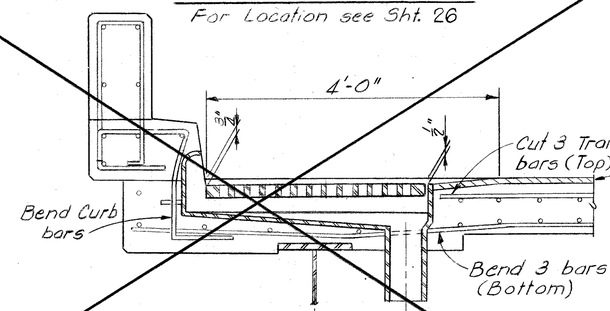


SECTION E-E

VOID
SEE SHEET 53
FOR REVISION
Δ

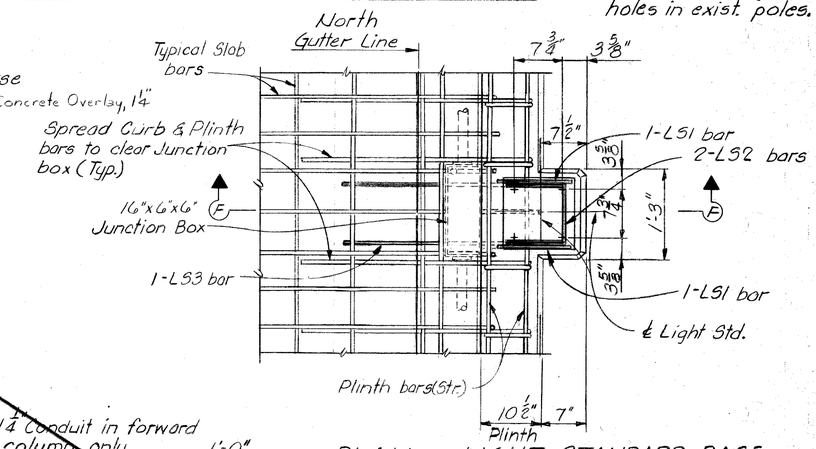


PLAN OF LIGHT STANDARD BASE
For Reinforcing Bar Details see Sht. 30
For Location see Shts. 25 & 26.

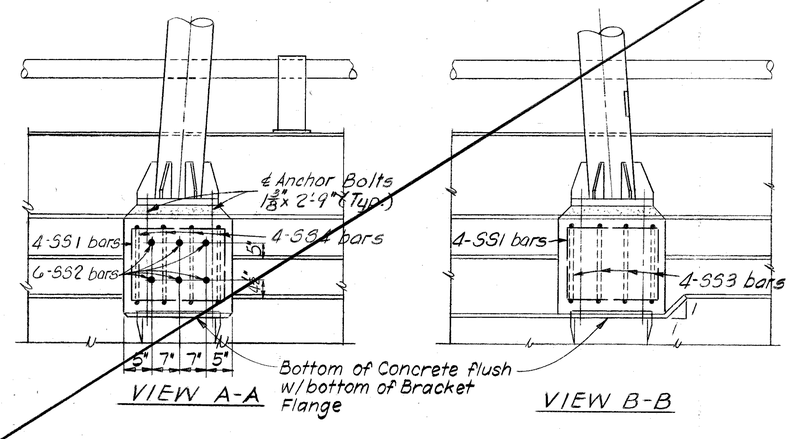


VIEW A-A

VIEW B-B

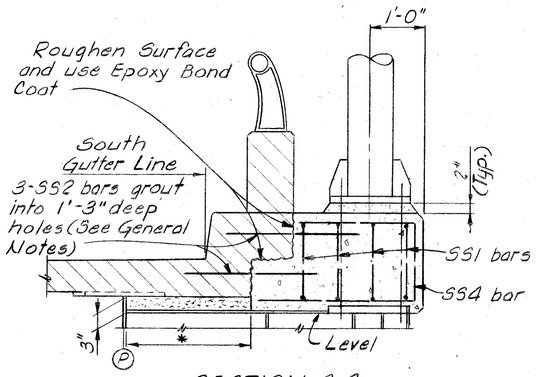


SECTION C-C

* Fill area between top flange of bracket and bottom of slab w/expansive grout.

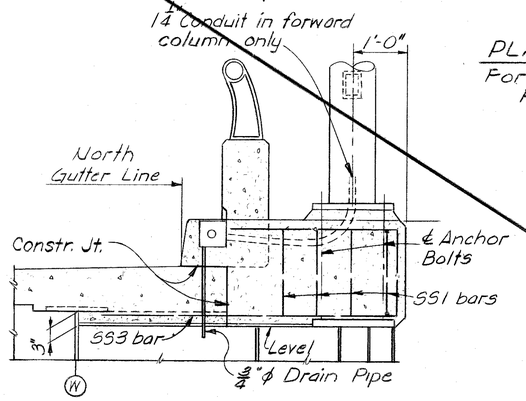


SECTION D-D

DECK-MISC. DETAILS

SHEET 28

**COMMONWEALTH OF KENTUCKY**
BUREAU OF HIGHWAYS
FRANKFORT
COUNTY OF
**JEFFERSON**
**LOUISVILLE-LEXINGTON**
ROAD

STATION 267+00 | P. E. PROJECT NO. 164-2(92)

CONSTRUCTION PROJECT NO. | MAINTENANCE PROJECT NO. | DRAWING NO. 19238

LETTING DATE

Δ Indicates Revision for G.M. Barrier

DATE 7/75 | REVISED | DATE | REVISED | DATE | REVISED

DATE 4-1-75 | DATE | DATE

DESIGNED BY | CHECKED BY PME | CHECKED BY | CHECKED BY

DETAILED BY RHM | CHECKED BY | CHECKED BY

TRACED BY

UPDATE DATE
LETTING DATE

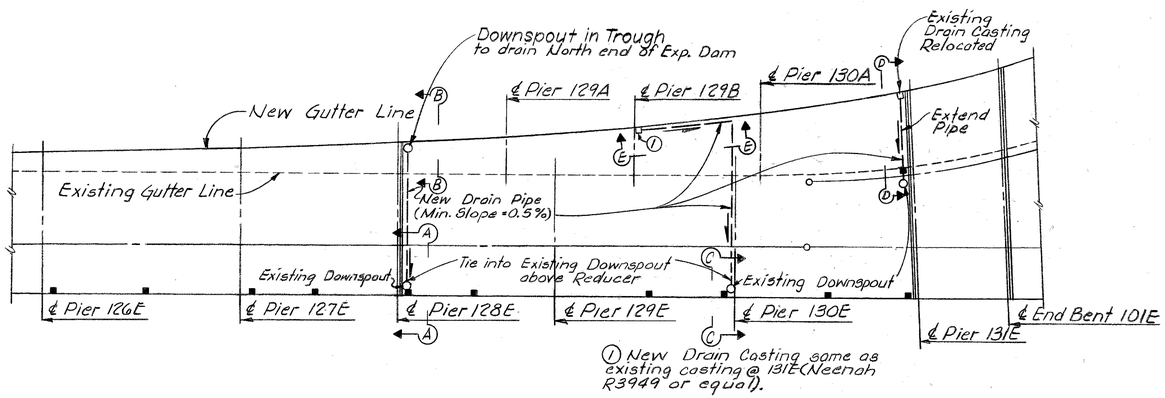


PLAN OF DRAINS

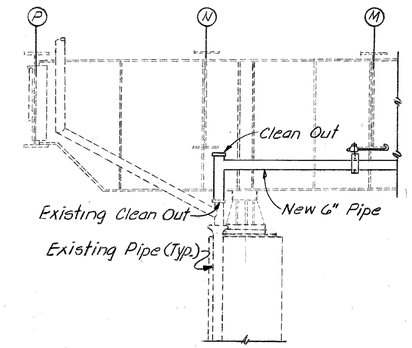


SECTION A-A

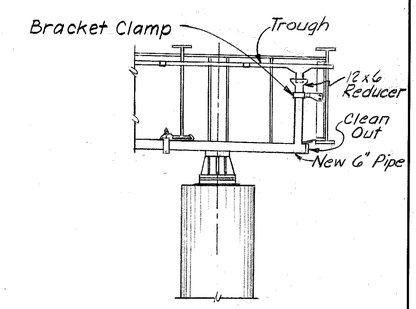


SECTION B-B

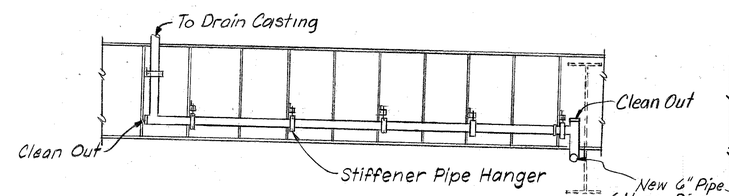


VIEW E-E - Gird. W

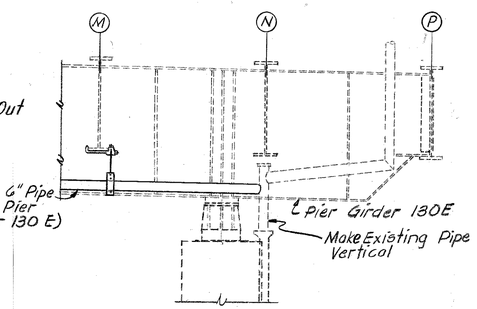


SECTION C-C

## NOTES

All Drain Pipe shall be 6" ϕ.

Pipe and all fittings are to be given one (1) coat of red lead paint and two (2) coats of aluminum paint.

All anchoring devices for pipe drains shall be so constructed as to be rattle free and secured against rotation or translation.

All pipe connections shall be leak proof.

Pipe shall be cut and welded to field dimensions.

All pipe shall be supported every 10' maximum horizontally and 8' maximum vertically.

Installation of new Drain Pipes shall be equal to existing in every respect.

Drain Pipe shall conform to article 643.12.0 of the Specifications.

Existing Drain shall be removed, cleaned, and placed in relocated position as detailed. Replacement of damaged drain shall be at Contractors expense. See Removal of Existing Reinforced Concrete General Notes.

Contractor shall splice new reinforcement, in kind, to exposed existing reinforcement to form a continuous reinforcement grid between existing and new slabs.

All Clean Outs to be accessible for maintenance.

## HANDRAIL NOTES

~~Existing handrail post spacing shall be measured and the sections of handrail shall be match-marked.~~

~~The existing handrail shall be removed in sections, without removing posts from the rail, and stored in a safe place. The existing nuts and washers shall be saved.~~

~~When setting the new anchor bolts in the new plinth, care shall be taken to position the first post (post at West end) in each deck unit the same distance from ℄ Pier as in the existing handrail. Anchor bolts for the remaining posts in each unit shall be set according to the existing spacing for that unit.~~

~~At Pier 124E and 128E provide a 1'-0" long expansion sleeve centered on railing gap.~~

~~At Pier 131E replace the last length of handrail in Unit 8 with a new length of rail cut to give the standard 3" gap to the first length of handrail in Unit 9. Use the existing expansion sleeve.~~

~~At End Bent 101E cut rail if necessary to get standard 4" gap to the end of the wingwall.~~

~~New anchor bolts for handrail are included in bid item "Relocate Existing Bridge Railing".~~

△ Handrail to be removed, inventory made, and delivered to Maintenance Garage of Kentucky Bureau of Highways at Middletown, English Station Road, one-half mile north of U S 60, as directed by the Engineer.

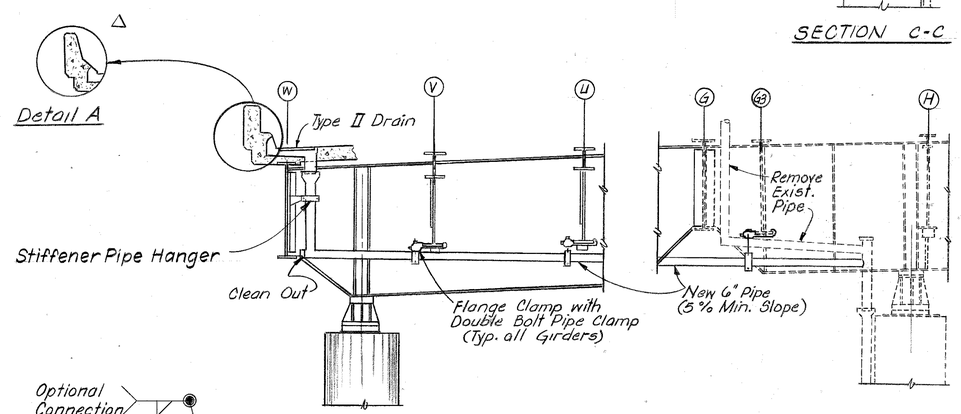


SECTION D-D

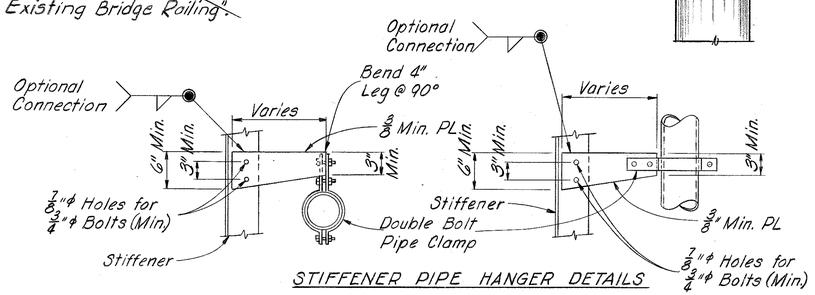


STIFFENER PIPE HANGER DETAILS

DRAINAGE DETAILS & HANDRAIL

SHEET 29

**COMMONWEALTH OF KENTUCKY**
BUREAU OF HIGHWAYS
FRANKFORT
COUNTY OF
JEFFERSON
LOUISVILLE - LEXINGTON
ROAD

STATION 267 + 00 | P. E. PROJECT NO. 164-2(92)

| CONSTRUCTION PROJECT NO. | MAINTENANCE PROJECT NO. | DRAWING NO. |
|---|---|---|
| | | 19238 |

| | | | |
|---|---|---|---|
| △ Indicates Revision For G.M. Barrier | REVISED | DATE 4-15 | DATE 7/15 |
| | REVISED | DATE 4-16 | DATE |
| | REVISED | DATE | DATE |
| DESIGNED BY RHC | CHECKED BY PME | | |
| DETAILED BY RHC | CHECKED BY PME | | |
| TRACED BY | CHECKED BY | | |

UPDATE DATE
LETTING DATE

## SLAB

| MARK | TYPE | SIZE | NO. OF BARS IN SPAN EAST OF PIER 122 | 123 | 124 | 125A | 126 | 127 | 128 | 129A | 129B | 130A | 131 | LENGTH ft. | in. | a ft. | in. | LOCATION |
|---|---|---|---|---|---|---|---|---|---|---|---|---|---|---|---|---|---|---|
| S1 | 2 | 4 | 80 | 80 | 72 | 109 | 101 | 80 | 56 | 65 | 65 | 74 | 47 | 6 | 0 | - | - | Plinth Tie |
| S2 | 5 | 4 | 12 | - | - | - | - | - | - | - | - | - | - | 4 | 1 | 1 | 4½ | Curb Tie |
| S3 | 5 | 4 | 68 | 80 | 72 | 109 | 101 | 80 | 56 | 65 | 65 | 74 | 47 | 4 | 0 | 1 | 3 | " " |
| S4 | 6 | 6 | 80 | 30 | - | 109 | 101 | 80 | 56 | 65 | 65 | 74 | 47 | 4 | 8 | 1 | 7 | Haunch |
| S5 | Str. | 4 | 21 | - | - | - | - | - | - | - | - | 99 | - | 42 | 8 | - | - | T/SL |
| S6 | " | 5 | 13 | - | - | - | - | - | - | - | - | 127 | - | 43 | 1 | - | - | B/SL |
| S7 | 7 | 6 | 158 | - | - | - | - | - | - | - | - | - | - | 6 | 0 | 4 | 9 | T/ST |
| S8 | Str. | 6 | 68 | - | - | - | - | - | - | - | - | - | - | 4 | 9 | - | - | B/ST |
| S9 | " | 4 | 8 | - | 8 | 12 | - | - | - | - | - | - | - | 41 | 0 | - | - | LP |
| S10 | 7 | 6 | - | - | 144 | - | - | - | - | - | - | - | - | 10 | 11 | 9 | 8 | T/ST |
| S11 | Str. | 6 | - | - | 144 | - | - | - | - | - | - | - | - | 9 | 8 | - | - | B/ST |
| S12 | " | 4 | - | 25 | - | - | - | 43 | - | - | - | - | - | 45 | 0 | - | - | T/SL |
| S13 | " | 5 | - | 20 | - | - | - | 50 | - | - | - | - | - | 45 | 5 | - | - | B/SL |
| S14 | " | 4 | - | 12 | - | - | - | 12 | 8 | - | - | - | - | 31 | 0 | - | - | LP |
| S15 | 7 | 6 | - | - | - | 216 | - | - | - | - | - | - | - | 13 | 4 | 12 | 1 | T/ST |
| S16 | Str. | 6 | - | - | - | 216 | - | - | - | - | - | - | - | 12 | 1 | - | - | B/ST |
| S17 | " | 4 | - | - | 29 | - | - | - | - | - | - | - | - | 40 | 7 | - | - | T/SL |
| S18 | " | 5 | - | - | 28 | - | - | - | - | - | - | - | - | 41 | 0 | - | - | B/SL |
| S19 | 7 | 6 | - | - | - | - | 201 | - | - | - | - | - | - | 15 | 6 | 14 | 3 | T/ST |
| S20 | Str. | 6 | - | - | - | - | 201 | - | - | - | - | - | - | 14 | 3 | - | - | B/ST |
| S21 | 7 | 6 | - | - | - | - | - | 159 | - | - | - | - | - | 18 | 9 | 17 | 6 | T/ST |
| S22 | Str. | 6 | - | - | - | - | - | 159 | - | - | - | - | - | 17 | 6 | - | - | B/ST |
| S23 | " | 4 | - | - | - | - | 12 | - | - | 8 | 8 | - | - | 37 | 0 | - | - | LP |
| S24 | 7 | 6 | - | - | - | - | - | - | 56 | - | - | - | - | 20 | 10 | 19 | 7 | T/ST |
| S25 | 7 | 6 | - | - | - | - | - | - | 55 | - | - | - | - | 22 | 11 | 21 | 8 | " |
| S26 | Str. | 6 | - | - | - | - | - | - | 56 | - | - | - | - | 19 | 7 | - | - | B/ST |
| S27 | " | 6 | - | - | - | - | - | - | 55 | - | - | - | - | 21 | 8 | - | - | " |
| S28 | " | 4 | - | - | - | 51 | - | - | 50 | - | - | - | - | 31 | 8 | - | - | T/SL |
| S29 | " | 5 | - | - | - | 55 | - | - | 64 | - | - | - | - | 32 | 1 | - | - | B/SL |
| S30 | " | 4 | - | - | - | - | - | - | - | - | - | 8 | - | 42 | 0 | - | - | LP |
| S31 | " | 4 | - | - | - | - | - | - | - | - | - | - | 8 | 26 | 0 | - | - | LP |
| S32 | " | 4 | - | - | - | 15 | - | - | - | 59 | 28 | - | - | 28 | 0 | - | - | T/SL |
| S33 | " | 5 | - | - | - | 16 | - | - | - | 73 | 24 | - | - | 28 | 5 | - | - | B/SL |
| S34 | " | 4 | - | - | - | - | 58 | - | - | - | 50 | - | - | 37 | 8 | - | - | T/SL |
| S35 | " | 5 | - | - | - | - | 65 | - | - | - | 80 | - | - | 38 | 1 | - | - | B/SL |
| S36 | " | 4 | - | - | - | - | - | - | - | 34 | 16 | - | - | 19 | 2 | - | - | T/SL |
| S37 | " | 5 | - | - | - | - | - | - | - | 47 | 17 | - | - | 19 | 7 | - | - | B/SL |
| S38 | " | 4 | - | - | - | - | - | - | - | - | - | - | 104 | 26 | 8 | - | - | T/SL |
| S39 | " | 5 | - | - | - | - | - | - | - | - | - | - | 130 | 27 | 1 | - | - | B/SL |
| S40 | " | 5 | - | 5 | - | 8 | 12 | 14 | - | 21 | 31 | 40 | - | 15 | 0 | - | - | T/S@Piers |
| S41 | 7 | 6 | - | 159 | - | - | - | - | - | - | - | - | - | 8 | 9 | 7 | 6 | T/ST |
| S42 | 7 | 6 | - | - | - | - | - | - | - | 43 | - | - | - | 25 | 2 | 23 | 11 | " |
| S43 | Str. | 6 | - | - | - | - | - | - | - | 43 | - | - | - | 23 | 11 | - | - | B/ST |
| S44 | 7 | 6 | - | - | - | - | - | - | - | 43 | - | - | - | 27 | 6 | 26 | 3 | T/ST |
| S45 | Str. | 6 | - | - | - | - | - | - | - | 43 | - | - | - | 26 | 3 | - | - | B/ST |
| S46 | 7 | 6 | - | - | - | - | - | - | - | 43 | - | - | - | 29 | 10 | 28 | 7 | T/ST |
| S47 | Str. | 6 | - | - | - | - | - | - | - | 43 | - | - | - | 28 | 7 | - | - | B/ST |
| S48 | 7 | 6 | - | - | - | - | - | - | - | - | 44 | - | - | 32 | 8 | 31 | 5 | T/ST |
| S49 | Str. | 6 | - | - | - | - | - | - | - | - | 44 | - | - | 31 | 5 | - | - | B/ST |
| S50 | 7 | 6 | - | - | - | - | - | - | - | - | 43 | - | - | 35 | 6 | 34 | 3 | T/ST |
| S51 | Str. | 6 | - | - | - | - | - | - | - | - | 43 | - | - | 34 | 3 | - | - | B/ST |

## SLAB

| MARK | TYPE | SIZE | NO. OF BARS IN SPAN EAST OF PIER 122 | 123 | 124 | 125A | 126 | 127 | 128 | 129A | 129B | 130A | 131 | LENGTH ft. | in. | a ft. | in. | LOCATION |
|---|---|---|---|---|---|---|---|---|---|---|---|---|---|---|---|---|---|---|
| S52 | 7 | 6 | - | - | - | - | - | - | - | - | 43 | - | - | 38 | 4 | 37 | 1 | T/ST |
| S53 | Str. | 6 | - | - | - | - | - | - | - | - | 43 | - | - | 37 | 1 | - | - | B/ST |
| S54 | 7 | 6 | - | - | - | - | - | - | - | - | - | 37 | - | 40 | 11 | 39 | 8 | T/ST |
| S55 | Str. | 6 | - | - | - | - | - | - | - | - | - | 37 | - | 39 | 8 | - | - | B/ST |
| S56 | 7 | 6 | - | - | - | - | - | - | - | - | - | 37 | - | 43 | 6 | 42 | 3 | T/ST |
| S57 | Str. | 6 | - | - | - | - | - | - | - | - | - | 37 | - | 42 | 3 | - | - | B/ST |
| S58 | 7 | 6 | - | - | - | - | - | - | - | - | - | 37 | - | 23 | 1 | 21 | 9 | T/ST |
| S59 | Str. | 6 | - | - | - | - | - | - | - | - | - | 37 | - | 33 | 6 | - | - | B/ST |
| S60 | 7 | 6 | - | - | - | - | - | - | - | - | - | 36 | 93 | 25 | 0 | 23 | 9 | T/ST |
| S61 | Str. | 6 | - | - | - | - | - | - | - | - | - | 36 | 93 | 36 | 0 | - | - | B/ST |
| S62 | Str. | 6 | - | - | - | - | - | - | - | - | - | 73 | 93 | 26 | 2 | - | - | T/ST |
| S63 | Str. | 6 | - | - | - | - | - | - | - | - | - | 73 | 93 | 13 | 10 | - | - | B/ST |
| S64 | Str. | 6 | - | 159 | - | - | - | - | - | - | - | - | - | 7 | 6 | - | - | " |
| S65 | 6 | 6 | - | 50 | - | - | - | - | - | - | - | - | - | 9 | 7 | 6 | 6 | Haunch |
| S66 | 6 | 6 | - | - | 72 | - | - | - | - | - | - | - | - | 10 | 5 | 7 | 4 | " |
| | | | | | | | | | | | | | | | | | | |
| LS1 | 9 | 4 | 2 | - | - | - | 2 | - | - | - | - | 2 | - | 8 | 4 | - | - | Light Std. |
| LS2 | 8 | 4 | 2 | - | - | - | 2 | - | - | - | - | 2 | - | 2 | 10 | - | - | " " |
| LS3 | 8 | 4 | 1 | - | - | - | 1 | - | - | - | - | 1 | - | 6 | 10 | - | - | " " |
| | | | | | | | | | | | | | | | | | | |
| SS1 | 11 | 4 | - | - | - | 4 | 4 | - | - | - | - | - | - | 6 | 10 | - | - | SS/NF |
| SS1 | 11 | 4 | - | - | - | 4 | 4 | - | - | - | - | - | - | 6 | 10 | - | - | SS/SF |
| SS2 | Str. | 6 | - | - | - | 6 | 6 | - | - | - | - | - | - | 2 | 6 | - | - | " |
| SS3 | 10 | 6 | - | - | - | 4 | 4 | - | - | - | - | - | - | 8 | 10 | - | - | SS/NF |
| SS4 | 10 | 6 | - | - | - | 4 | 4 | - | - | - | - | - | - | 6 | 4 | - | - | SS/SF |
| | | | | | | | | | | | | | | | | | | |
| DD1 | Str. | 6 | - | - | - | - | - | - | - | - | 3 | 3 | - | 5 | 6 | - | - | Slab@Drain |
| DD2 | 7 | 6 | - | - | - | - | - | - | - | - | 2 | 2 | - | 6 | 3 | 5 | 6 | " " |
| | | | | | | | | | | | | | | | | | | |
| | | | | | | | | | | | | | | | | | | |

T/ST = Top of Slab Transverse
B/ST = Bott. " " "
T/SL = Top " " Longitudinal
B/SL = Bott. " " "
LP = Longitudinal Plinth
SS/NF = Sign Support, North Fascia
SS/SF = " " , South "

Long. Curb Bars are included with T/SL Bars.
" Haunch " " " " B/SL " ,

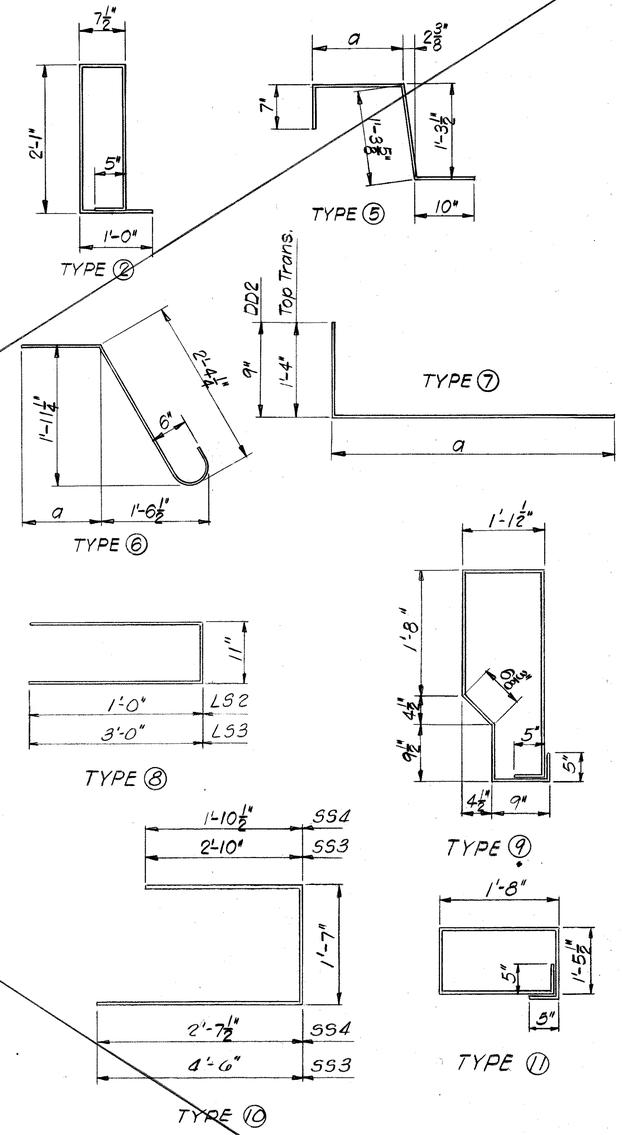


VOID
See Sheet 54 for Revision

DECK BAR LIST

Sheet No. 30

**COMMONWEALTH OF KENTUCKY**
BUREAU OF HIGHWAYS
FRANKFORT
COUNTY OF
**JEFFERSON**
**LOUISVILLE-LEXINGTON**
ROAD
STATION 267+00 P. E. PROJECT NO. I64-2(92)

| CONSTRUCTION PROJECT NO. | MAINTENANCE PROJECT NO. | DRAWING NO. |
|---|---|---|
| | | 19238 |

REVISED △ Indicates revision for G.M. Barrier DATE 7-15

DESIGNED BY DMB CHECKED BY RBS DATE April, 75
DETAILED BY DME CHECKED BY RHMc DATE
TRACED BY CHECKED BY DATE

UPDATE DATE
LETTING DATE

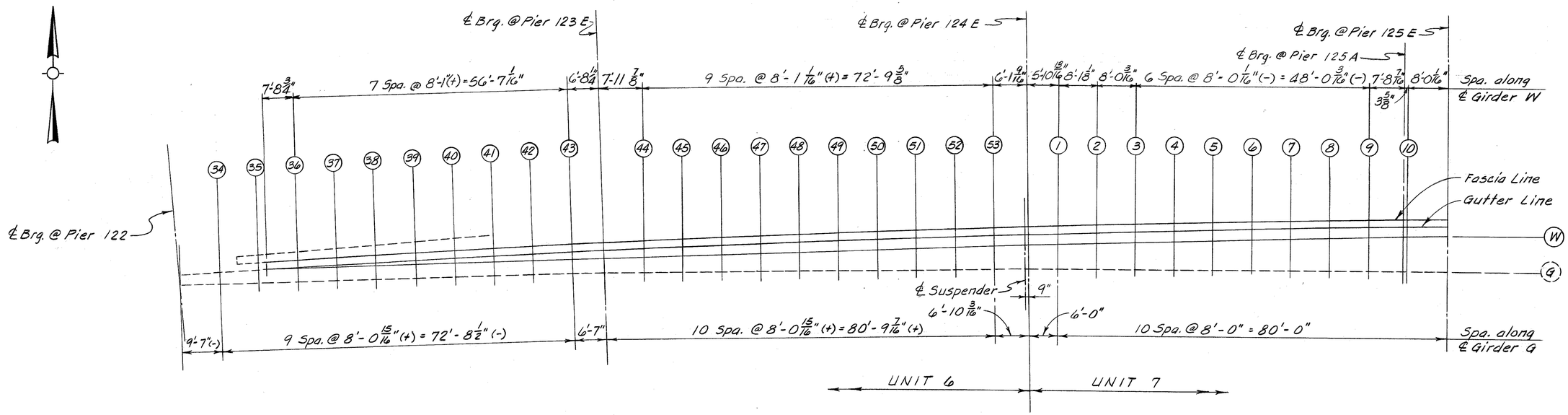


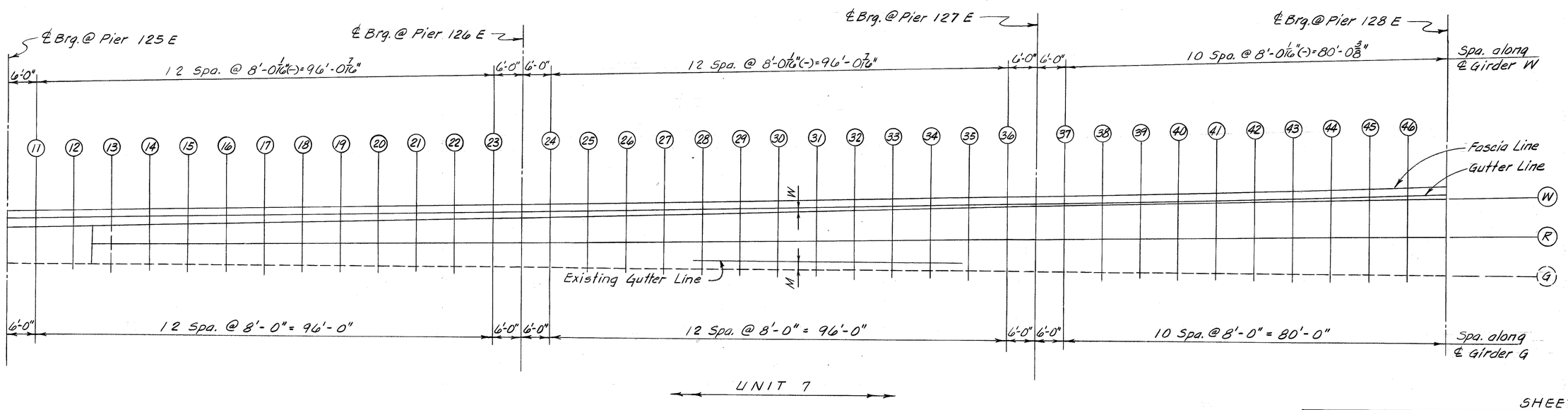


SHEET 31

CONSTRUCTION ELEVATIONS

**COMMONWEALTH OF KENTUCKY**
BUREAU OF HIGHWAYS
FRANKFORT
COUNTY OF
**JEFFERSON**
**LOUISVILLE-LEXINGTON**
ROAD

STATION 267+00 — P. E. PROJECT NO. I64-2(92)

| CONSTRUCTION PROJECT NO. | MAINTENANCE PROJECT NO. | DRAWING NO. |
|---|---|---|
| | | 19238 |

DESIGNED BY PBS — CHECKED BY Blank — DATE 3-75 — REVISED
DETAILED BY E.L.U./R.H.M. — CHECKED BY Blank — DATE 3-75 — REVISED
TRACED BY — CHECKED BY — DATE — REVISED

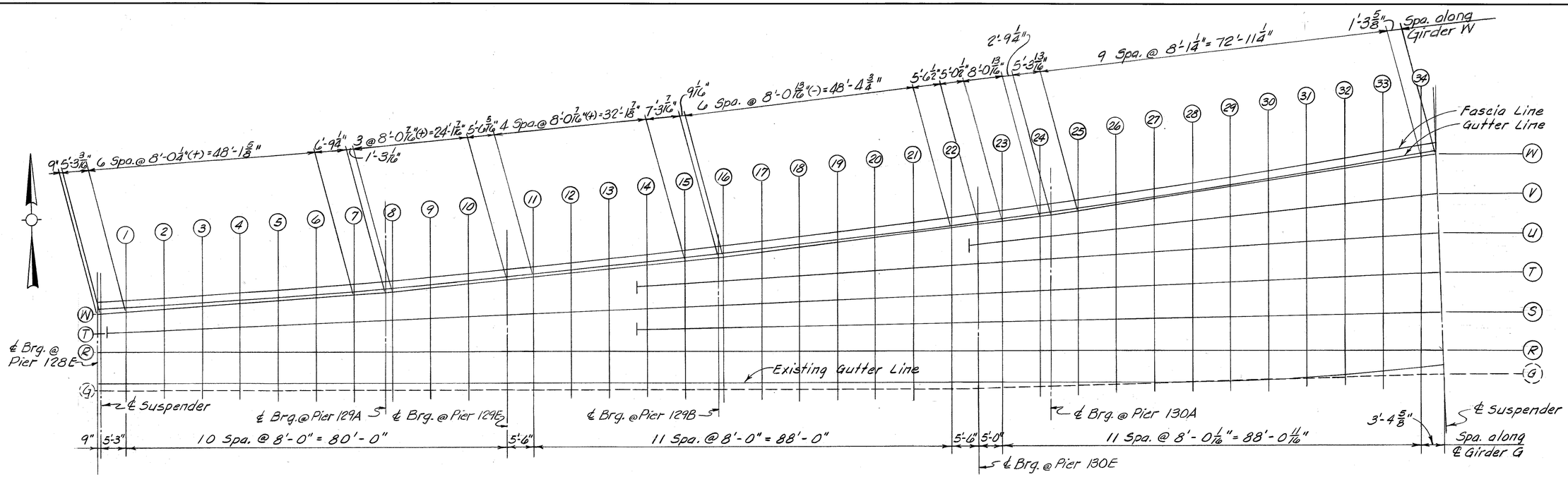


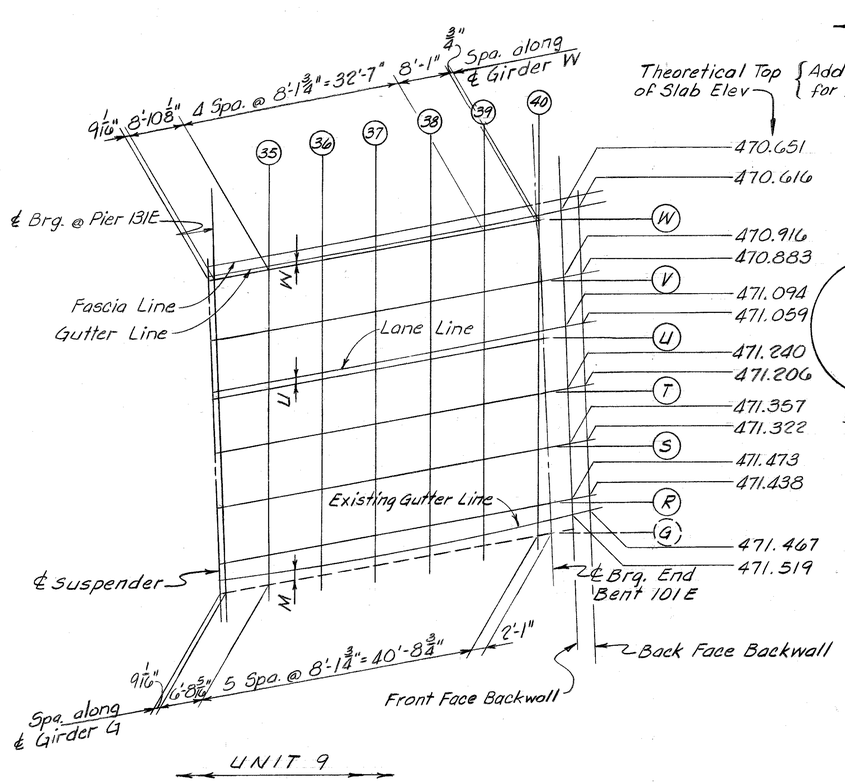


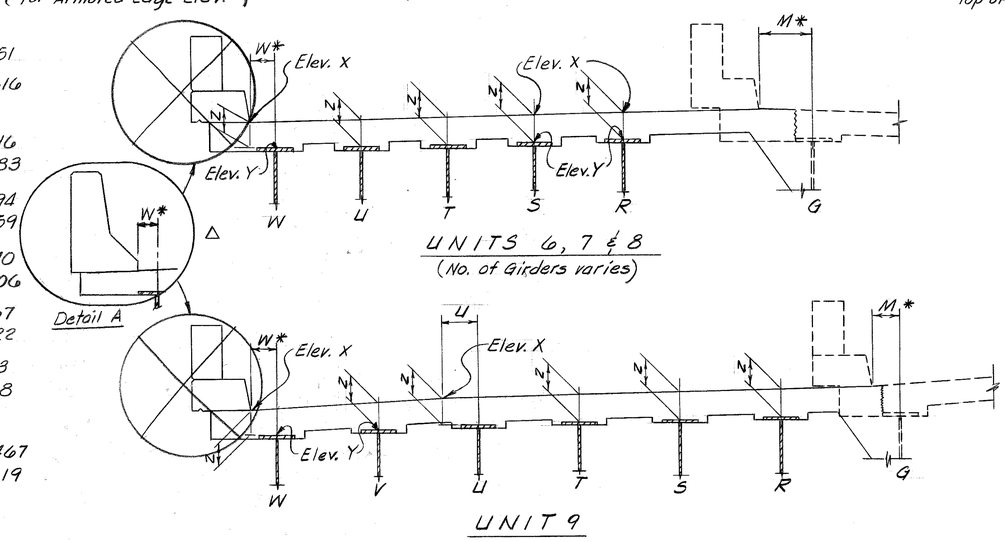


TYPICAL SECTIONS

* - Negative sign indicates girder on opposite side of reference line than shown.

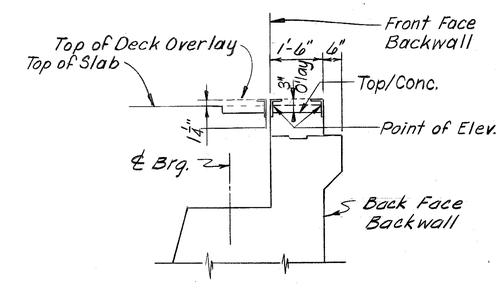


SECTION THRU BENT 101E
(New Section)

△ Indicates Revision For G.M. Barrier

UPDATE DATE
LETTING DATE

DESIGNED BY R.B.S. CHECKED BY R.B.S. DATE 3-75 REVISED DATE 7/75
DETAILED BY E.L.U./R.H.M. CHECKED BY R.B.S. DATE 3-75 REVISED DATE
TRACED BY CHECKED BY DATE REVISED DATE

SHEET 32

**COMMONWEALTH OF KENTUCKY**
BUREAU OF HIGHWAYS
FRANKFORT
COUNTY OF
**JEFFERSON**
**LOUISVILLE-LEXINGTON**
ROAD
STATION 267+00 P.E. PROJECT NO. I64-2(92)

| CONSTRUCTION PROJECT NO. | MAINTENANCE PROJECT NO. | DRAWING NO. |
|---|---|---|
| | | 19238 |

CONSTRUCTION ELEVATIONS

| Section | TABLE OF ELEVATIONS FOR UNIT 6 | | | |
|---|---|---|---|---|
| | GIRDER W | | | |
| | W | X@Gutter | Y | Z |
| ℄ Brg. 122 | | | | |
| 34 | | | | |
| 35 | | | | |
| 36 | -0'-7 1/16" | 470.256 | | |
| 37 | -0'-3 1/2" | 470.328 | | |
| 38 | -0'-0 3/16" | 470.396 | | |
| 39 | +0'-2 15/16" | 470.465 | | |
| 40 | 0'-5 13/16" | 470.531 | | |
| 41 | 0'-8 9/16" | 470.590 | | |
| 42 | 0'-11 1/16" | 470.659 | | |
| 43 | 1'-1 3/8" | 470.731 | | |
| | | | | |
| ℄ Brg. 123 | 1'-3 1/8" | 470.799 | | |
| 44 | 1'-5" | 470.881 | | |
| 45 | 1'-6 3/4" | 470.984 | | |
| 46 | 1'-8 9/16" | 471.082 | | |
| 47 | 1'-9 5/8" | 471.177 | | |
| 48 | 1'-10 13/16" | 471.265 | | |
| 49 | 1'-11 3/4" | 471.348 | | |
| 50 | 2'-0 7/16" | 471.423 | | |
| 51 | 2'-1" | 471.486 | | |
| 52 | 2'-1 5/16" | 471.543 | | |
| 53 | 2'-1 7/16" | 471.592 | | |
| ℄. Susp. ⚠ | 2'-1 3/8" | 471.621 | | |
| ℄ Brg. 124 | 2'-1 3/8" | 471.629 | | |

⚠ Theoretical Top of Slab Elev. shown. Add 0.104 (1 1/4" Overlay) for Exp. Dam Elev. See Section A-A Sheet 23.

| Section | TABLE OF ELEVATIONS FOR UNIT 7 | | | | | | | |
|---|---|---|---|---|---|---|---|---|
| | GIRDER W | | | | GIRDER R | | | |
| | W | X@Gutter | Y | Z | *M | X | Y | Z |
| ℄ Brg. 124 | 2'-1 3/8" | 471.629 | | | | | | |
| 1 | 2'-2" | 471.700 | | | | | | |
| 2 | 2'-2 9/16" | 471.791 | | | | | | |
| 3 | 2'-3" | 471.869 | | | | | | |
| 4 | 2'-3 1/4" | 471.940 | | | | | | |
| 5 | 2'-3 1/4" | 472.005 | | | | | | |
| 6 | 2'-3 1/16" | 472.065 | | | | | | |
| 7 | 2'-2 11/16" | 472.121 | | | | | | |
| 8 | 2'-2 1/8" | 472.177 | | | | | | |
| 9 | 2'-1 3/8" | 472.237 | | | | | | |
| 10 | 2'-0 3/8" | 472.308 | | | | | | |
| | | | | | | | | |
| ℄ Brg. 125 | 1'-11 7/8 | 472.393 | | | | | | |
| 11 | 1'-11 1/4" | 472.466 | | | | | | |
| 12 | 1'-10 1/2" | 472.565 | | | | | | |
| 13 | 1'-9 3/4" | 472.669 | | | 1'-5 3/4" | 472.548 | | |
| 14 | 1'-9" | 472.767 | | | | 472.639 | | |
| 15 | 1'-8 1/4" | 472.857 | | | | 472.727 | | |
| 16 | 1'-7 1/2" | 472.943 | | | | 472.810 | | |
| 17 | 1'-6 3/4" | 473.017 | | | | 472.886 | | |
| 18 | 1'-6" | 473.084 | | | | 472.953 | | |
| 19 | 1'-5 3/16" | 473.149 | | | | 473.018 | | |
| 20 | 1'-4 7/16" | 473.203 | | | | 473.078 | | |
| 21 | 1'-3 11/16" | 473.253 | | | | 473.136 | | |
| 22 | 1'-2 15/16" | 473.305 | | | | 473.194 | | |
| 23 | 1'-2 3/16" | 473.363 | | | | 473.256 | | |
| | | | | | | | | |
| ℄ Brg. 126 | 1'-1 5/8" | 473.400 | | | | 473.306 | | |
| 24 | 1'-1 1/16" | 473.444 | | | | 473.361 | | |
| 25 | 1'-0 1/4" | 473.507 | | | | 473.443 | | |
| 26 | 0'-11 1/2" | 473.575 | | | | 473.528 | | |
| 27 | 0'-10 3/4 | 473.641 | | | | 473.614 | | |
| 28 | 0'-10" | 473.713 | | | | 473.697 | | |
| 29 | 0'-9 1/4" | 473.783 | | | | 473.776 | | |
| 30 | 0'-8 1/2" | 473.848 | | | | 473.849 | | |
| 31 | 0'-7 3/4" | 473.912 | | | | 473.916 | | |
| 32 | 0'-6 15/16" | 473.970 | | | | 473.976 | | |
| 33 | 0'-6 3/16" | 474.027 | | | | 474.034 | | |
| 34 | 0'-5 7/16" | 474.078 | | | | 474.087 | | |
| 35 | 0'-4 11/16" | 474.131 | | | | 474.146 | | |
| 36 | 0'-3 15/16" | 474.182 | | | | 474.203 | | |
| | | | | | | | | |
| ℄ Brg. 127 | 0'-3 3/16" | 474.225 | | | | 474.248 | | |
| 37 | 0'-2 13/16" | 474.266 | | | | 474.292 | | |
| 38 | 0'-2 1/4" | 474.321 | | | | 474.357 | | |
| 39 | 0'-2 1/16" | 474.377 | | | | 474.422 | | |
| 40 | 0'-2 1/4" | 474.430 | | | | 474.486 | | |
| 41 | 0'-2 3/4" | 474.473 | | | | 474.543 | | |
| 42 | 0'-3 9/16" | 474.507 | | | | 474.590 | | |
| 43 | 0'-4 3/4" | 474.530 | | | | 474.625 | | |
| 44 | 0'-6 1/4" | 474.541 | | | | 474.647 | | |
| 45 | 0'-8 7/16" | 474.540 | | | | 474.660 | | |
| 46 | 0'-10 1/4" | 474.531 | | | | 474.664 | | |
| ℄ Brg. 128 | 1'-0 3/4" | 474.518 | | | 1'-5 3/4" | 474.665 | | |

*M Dimension from Existing Girder G to Existing Gutter Line. Elevation at Existing Gutter Line does not change

## CONSTRUCTION NOTES

1. Take elevations on top of beam at points indicated (1-1, 2-2, etc.) after diaphragms are in place and all falsework has been removed but before forms for concrete slabs have been put in place. Read elevations to three decimals using a target rod and enter readings in "Table of Elevations", column Y.

2. Compute dimension Z as follows (See Typ. Section Sht. No. 31): Elevation X minus Elevation Y equals dimension Z. Elevation X includes camber due to weight of concrete slab, curb, plinth, handrail and future surfacing. Measuring of dimension Z gives the final check on beam tolerances for camber, beam damage and errors in erection that produce reverse cambers, sags, and unsightly fascia beams.

3. For setting templates measure dimension Z above top of beam for top of templates. Do not set templates by elevations.

4. The elevations given on this sheet are theoretical elevations based on the "As Built" plans of the original bridge construction. The profile grade and cross slope shall be adjusted in the field as directed by the Engineer to insure the new slab meets the existing slab properly and adequate slab thickness is maintained.

UPDATE DATE
LETTING DATE

DESIGNED BY R. Block DATE 3-75 REVISED
DETAILED BY E.L.U./RHMC CHECKED BY R. Block DATE 3-75 REVISED
TRACED BY CHECKED BY DATE REVISED

SHEET 33

CONSTRUCTION ELEVATIONS

COMMONWEALTH OF KENTUCKY
BUREAU OF HIGHWAYS
FRANKFORT
COUNTY OF
JEFFERSON
LOUISVILLE-LEXINGTON
ROAD
STATION 267+00 P. E. PROJECT NO. I64-2(92)

| CONSTRUCTION PROJECT NO. | MAINTENANCE PROJECT NO. | DRAWING NO. |
|---|---|---|
| | | 19238 |

## TABLE OF ELEVATIONS FOR UNIT 8

| Section | GIRDER W | | | | GIRDER V | | | GIRDER U | | | GIRDER T | | | GIRDER S | | | GIRDER R | | | | Section |
|---|---|---|---|---|---|---|---|---|---|---|---|---|---|---|---|---|---|---|---|---|---|
| | W | x@Gutter | y | z | x | y | z | x | y | z | x | y | z | x | y | z | *M | x | y | z | |
| ℄ Brg. 128 | 1'-0 3/8" | 474.518 | | | | | | | | | | | | | | | 1'-5 3/4" | 474.665 | | | ℄ Brg. 128 |
| ℄ Susp. △ | 1'-1" | 474.519 | | | | | | | | | 474.602 | | | | | | | 474.667 | | | ℄ Susp. △ |
| 1 | 0'-11 7/8" | 474.533 | | | | | | | | | 474.616 | | | | | | | 474.689 | | | 1 |
| 2 | 0'-10 3/8" | 474.548 | | | | | | | | | 474.636 | | | | | | | 474.721 | | | 2 |
| 3 | 0'-9 3/16" | 474.556 | | | | | | | | | 474.652 | | | | | | | 474.747 | | | 3 |
| 4 | 0'-8 1/2" | 474.558 | | | | | | | | | 474.658 | | | | | | | 474.764 | | | 4 |
| 5 | 0'-8 1/16" | 474.551 | | | | | | | | | 474.660 | | | | | | | 474.776 | | | 5 |
| 6 | 0'-8" | 474.539 | | | | | | | | | 474.656 | | | | | | | 474.783 | | | 6 |
| 7 | 0'-8 3/16" | 474.519 | | | | | | | | | 474.649 | | | | | | | 474.785 | | | 7 |
| ℄ Brg. 129 A | 0'-8 3/8" | 474.503 | | | | | | | | | 474.644 | | | | | | | 474.789 | | | ℄ Brg. 129 A |
| 8 | 0'-8 3/8" | 474.500 | | | | | | | | | 474.642 | | | | | | | 474.790 | | | 8 |
| 9 | 0'-7" | 474.481 | | | | | | | | | 474.638 | | | | | | | 474.797 | | | 9 |
| 10 | 0'-6" | 474.461 | | | | | | | | | 474.638 | | | | | | | 474.807 | | | 10 |
| ℄ Brg. 129 E | 0'-5 5/16" | 474.434 | | | | | | | | | 474.630 | | | | | | | 474.809 | | | ℄ Brg. 129 E |
| 11 | 0'-5" | 474.411 | | | | | | | | | 474.621 | | | | | | | 474.811 | | | 11 |
| 12 | 0'-4 7/8" | 474.372 | | | | | | | | | 474.599 | | | | | | | 474.801 | | | 12 |
| 13 | 0'-5 1/8" | 474.323 | | | | | | | | | 474.571 | | | | | | | 474.785 | | | 13 |
| 14 | 0'-5 11/16" | 474.264 | | | | | | 474.410 | | | 474.532 | | | 474.655 | | | | 474.763 | | | 14 |
| 15 | 0'-6 9/16" | 474.199 | | | | | | 474.355 | | | 474.486 | | | 474.616 | | | | 474.733 | | | 15 |
| ℄ Brg. 129 B | 0'-7 11/16" | 474.139 | | | | | | 474.301 | | | 474.443 | | | 474.575 | | | | 474.706 | | | ℄ Brg. 129 B |
| 16 | 0'-7 9/16" | 474.133 | | | | | | 474.296 | | | 474.440 | | | 474.572 | | | | 474.704 | | | 16 |
| 17 | 0'-6 5/16" | 474.066 | | | | | | 474.256 | | | 474.393 | | | 474.549 | | | | 474.678 | | | 17 |
| 18 | 0'-5 1/2" | 473.996 | | | | | | 474.210 | | | 474.346 | | | 474.521 | | | | 474.650 | | | 18 |
| 19 | 0'-4 15/16" | 473.895 | | | | | | 474.125 | | | 474.263 | | | 474.449 | | | | 474.582 | | | 19 |
| 20 | 0'-4 3/4" | 473.770 | | | | | | 474.015 | | | 474.157 | | | 474.350 | | | | 474.487 | | | 20 |
| 21 | 0'-4 15/16" | 473.639 | | | | | | 473.897 | | | 474.047 | | | 474.244 | | | | 474.389 | | | 21 |
| 22 | 0'-5 7/16" | 473.504 | | | | | | 473.772 | | | 473.934 | | | 474.129 | | | | 474.286 | | | 22 |
| ℄ Brg. 130 E | 0'-6" | 473.409 | | | 473.555 | | | 473.686 | | | 473.854 | | | 474.050 | | | 1'-5 3/4" | 474.213 | | | ℄ Brg. 130 E |
| 23 | 0'-6 3/8" | 473.321 | | | 473.478 | | | 473.605 | | | 473.783 | | | 473.975 | | | 1'-3 3/4" | 474.146 | | | 23 |
| 24 | 0'-7 5/16" | 473.180 | | | 473.340 | | | 473.479 | | | 473.672 | | | 473.861 | | | 1'-0 3/4" | 474.042 | | | 24 |
| ℄ Brg. 130 A | 0'-8 7/16" | 473.131 | | | 473.288 | | | 473.437 | | | 473.633 | | | 473.822 | | | | 474.007 | | | ℄ Brg. 130 A |
| 25 | 0'-7 1/2" | 473.040 | | | 473.217 | | | 473.357 | | | 473.562 | | | 473.749 | | | 0'-9 5/8" | 473.941 | | | 25 |
| 26 | 0'-6 5/16" | 472.903 | | | 473.107 | | | 473.235 | | | 473.453 | | | 473.637 | | | 0'-6 1/2" | 473.842 | | | 26 |
| 27 | 0'-5 7/16" | 472.763 | | | 472.984 | | | 473.117 | | | 473.346 | | | 473.530 | | | 0'-3 3/8" | 473.743 | | | 27 |
| 28 | 0'-4 13/16" | 472.617 | | | 472.857 | | | 472.994 | | | 473.230 | | | 473.419 | | | +0'-0 1/2" | 473.638 | | | 28 |
| 29 | 0'-4 3/16" | 472.410 | | | 472.663 | | | 472.813 | | | 473.053 | | | 473.247 | | | -0'-0 5/8" | 473.470 | | | 29 |
| 30 | 0'-5" | 472.220 | | | 472.482 | | | 472.647 | | | 472.892 | | | 473.091 | | | -0'-0 1/8" | 473.320 | | | 30 |
| 31 | 0'-5 9/16" | 472.020 | | | 472.284 | | | 472.472 | | | 472.720 | | | 472.925 | | | +0'-2 1/4" | 473.157 | | | 31 |
| 32 | 0'-6 7/16" | 471.810 | | | 472.079 | | | 472.287 | | | 472.537 | | | 472.753 | | | 0'-6 1/2" | 472.988 | | | 32 |
| 33 | 0'-7 11/16" | 471.605 | | | 471.880 | | | 472.111 | | | 472.360 | | | 472.586 | | | 1'-0 1/2" | 472.825 | | | 33 |
| 34 | 0'-9 5/16" | 471.387 | | | 471.666 | | | 471.918 | | | 472.165 | | | 472.401 | | | 1'-8 3/8" | 472.640 | | | 34 |
| ℄ Susp. △ | 0'-9 9/16" | 471.362 | | | 471.637 | | | 471.883 | | | 472.120 | | | 472.348 | | | 2'-0 1/8" | 472.571 | | | ℄ Susp. △ |
| ℄ Brg. 131 E | 0'-9 1/2" | 471.350 | | | 471.625 | | | 471.870 | | | 472.106 | | | 472.332 | | | 1'-11 1/2" | 472.553 | | | ℄ Brg. 131 E |

## TABLE OF ELEVATIONS FOR UNIT 9

| Section | GIRDER W | | | | GIRDER V | | | GIRDER U | | | | GIRDER T | | | GIRDER S | | | GIRDER R | | | | Section |
|---|---|---|---|---|---|---|---|---|---|---|---|---|---|---|---|---|---|---|---|---|---|---|
| | W | x@Gutter | y | z | x | y | z | U | x@U | y | z | x | y | z | x | y | z | *M | x | y | z | |
| ℄ Brg. 131 E | 0'-9 1/2" | 471.350 | | | 471.625 | | | 2'-2" | 471.807 | | | 472.106 | | | 472.332 | | | 1'-11 1/2" | 472.553 | | | ℄ Brg. 131 E |
| 35 | 0'-8 9/16" | 471.225 | | | 471.498 | | | 2'-1 1/2" | 471.688 | | | 471.966 | | | 472.183 | | | 1'-7 5/8" | 472.396 | | | 35 |
| 36 | 0'-8 1/4" | 471.099 | | | 471.368 | | | 2'-0 5/8" | 471.559 | | | 471.813 | | | 472.011 | | | 1'-4 1/2" | 472.204 | | | 36 |
| 37 | 0'-8 1/4" | 470.994 | | | 471.261 | | | 2'-0 7/16" | 471.451 | | | 471.680 | | | 471.860 | | | 1'-3 3/8" | 472.034 | | | 37 |
| 38 | 0'-8 9/16" | 470.901 | | | 471.170 | | | 2'-0 5/8" | 471.359 | | | 471.563 | | | 471.725 | | | 1'-4" | 471.882 | | | 38 |
| 39 | 0'-9 3/16" | 470.794 | | | 471.066 | | | 2'-1 9/16" | 471.252 | | | 471.434 | | | 471.578 | | | 1'-6 5/8" | 471.718 | | | 39 |
| 40 | 0'-10 1/8" | 470.676 | | | 470.950 | | | 2'-2 1/8" | 471.134 | | | 471.293 | | | 471.418 | | | 1'-11 1/8" | 471.543 | | | 40 |
| ℄ Brg. 101 E | 0'-10 1/4" | 470.676 | | | 470.943 | | | 2'-2 3/16" | 471.118 | | | 471.267 | | | 471.383 | | | 2'-0 1/2" | 471.499 | | | ℄ Brg. 101 E |

△ Theoretical Top of Slab Elevation shown.
Add 0.104 (1 1/4" Overlay) for Exp. Dam Elevation.
See Section A-A, Sheet 23.

*M Dimension from Existing Girder G to Existing Gutter Line. Elevation at Existing Gutter Line does not change.

SHEET 34

CONSTRUCTION ELEVATIONS

**COMMONWEALTH OF KENTUCKY**
BUREAU OF HIGHWAYS
FRANKFORT
COUNTY OF
**JEFFERSON**
**LOUISVILLE-LEXINGTON**
ROAD
STATION 267+00 — P. E. PROJECT NO. I64-2(92)

CONSTRUCTION PROJECT NO. | MAINTENANCE PROJECT NO. | DRAWING NO. 19238

LETTING DATE

DESIGNED BY Blank — CHECKED BY RBS — DATE 3-75
DETAILED BY E.L.U./R.H.M. — CHECKED BY Blank — DATE 3-75
TRACED BY — CHECKED BY — DATE
REVISED — DATE
REVISED — DATE
REVISED — DATE

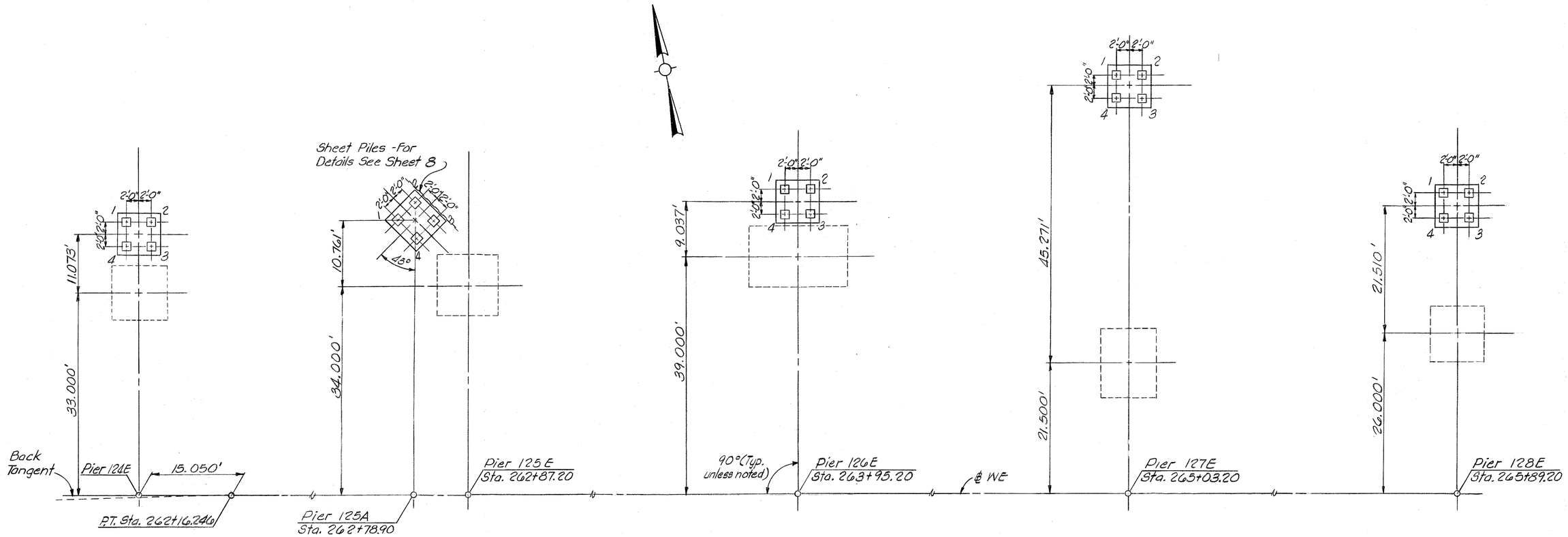


| PIER 124E | | | | |
|---|---|---|---|---|
| Pile Nº | Cutoff Elevation | Tip of Pile Elevation As Driven | Length of Pile in Place | Calculated Bearing Capacity-Tons |
| 1 | 433.50 | | | |
| 2 | ↓ | | | |
| 3 | | | | |
| 4 | | | | |

Max. Pile Tip Elev. = 405'

| PIER 125A | | | | |
|---|---|---|---|---|
| Pile Nº | Cutoff Elevation | Tip of Pile Elevation As Driven | Length of Pile in Place | Calculated Bearing Capacity-Tons |
| 1 | 432.23 | | | |
| 2 | ↓ | | | |
| 3 | | | | |
| 4 | | | | |

Max. Pile Tip Elev. = 406'

| PIER 126E | | | | |
|---|---|---|---|---|
| Pile Nº | Cutoff Elevation | Tip of Pile Elevation As Driven | Length of Pile in Place | Calculated Bearing Capacity-Tons |
| 1 | 433.97 | | | |
| 2 | ↓ | | | |
| 3 | | | | |
| 4 | | | | |

Max. Pile Tip Elev. = 406'

| PIER 127E | | | | |
|---|---|---|---|---|
| Pile Nº | Cutoff Elevation | Tip of Pile Elevation As Driven | Length of Pile in Place | Calculated Bearing Capacity-Tons |
| 1 | 435.91 | | | |
| 2 | ↓ | | | |
| 3 | | | | |
| 4 | | | | |

Max. Pile Tip Elev. = 406'

| PIER 128E | | | | |
|---|---|---|---|---|
| Pile Nº | Cutoff Elevation | Tip of Pile Elevation As Driven | Length of Pile in Place | Calculated Bearing Capacity-Tons |
| 1 | 436.30 | | | |
| 2 | ↓ | | | |
| 3 | | | | |
| 4 | | | | |

Max. Pile Tip Elev. = 405'

PILE RECORD - After all piles have been driven, the Resident Engineer shall record for each pile, the tip-of-pile elevation as driven, the length of pile in place and the calculated bearing capacity and shall return one blue print copy of this sheet with this data to the Director of the Division of Bridges so that the data may be recorded on the original plans. Lengths of piles in place shown hereon are the actual lengths of piles in the finished structure below cutoff elevation and are not necessarily pay items. This pile record does not replace other records of piles required to be kept and submitted by the Resident Engineer.

SHEET 35

PILE RECORD

COMMONWEALTH OF KENTUCKY
BUREAU OF HIGHWAYS
FRANKFORT
COUNTY OF
JEFFERSON
LOUISVILLE-LEXINGTON
ROAD
STATION 267+00 P. E. PROJECT NO. I64-2(92)

| CONSTRUCTION PROJECT NO. | MAINTENANCE PROJECT NO. | DRAWING NO. |
|---|---|---|
| | | 19238 |

UPDATE DATE
LETTING DATE

DESIGNED BY RHMC CHECKED BY DATE
DETAILED BY CHECKED BY DATE 3-75
TRACED BY CHECKED BY DATE
REVISED DATE
REVISED DATE
REVISED DATE

UPDATE DATE
LETTING DATE

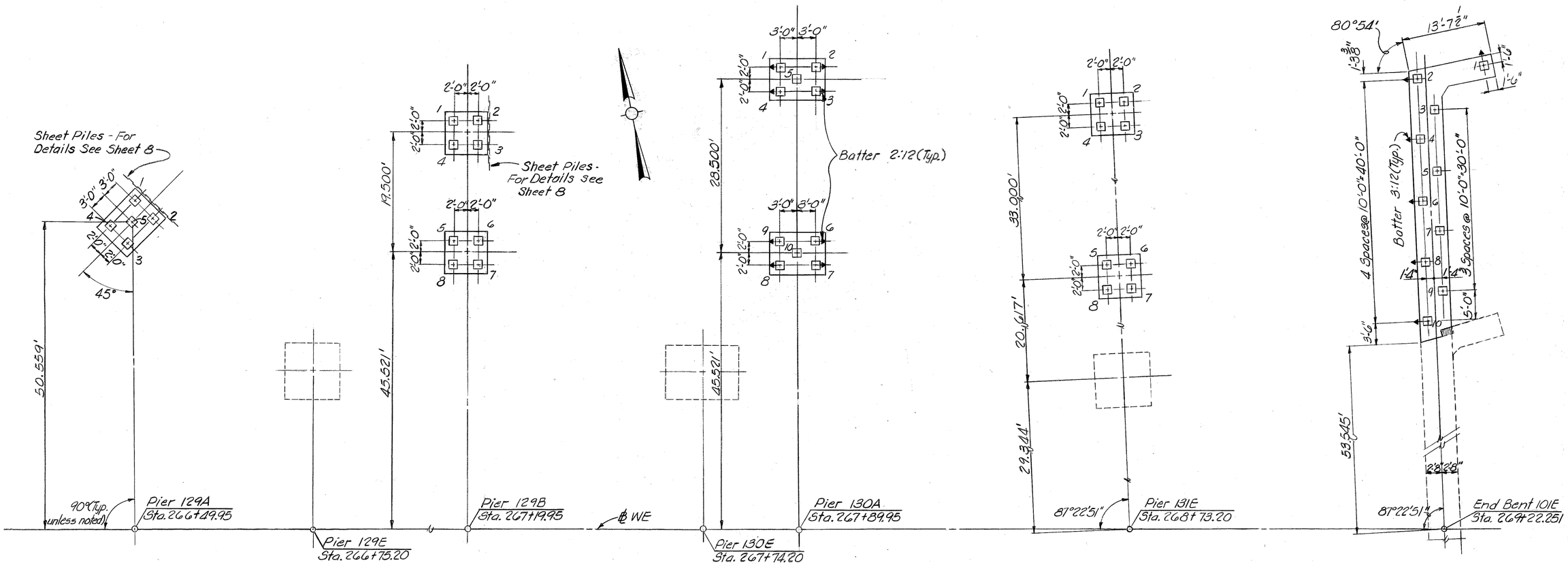


| PIER 129A | | | | |
|---|---|---|---|---|
| Pile Nº | Cutoff Elevation | Tip of Pile Elevation As Driven | Length of Pile in Place | Calculated Bearing Capacity-Tons |
| 1 | 435.72 | | | |
| 2 | ↓ | | | |
| 3 | | | | |
| 4 | | | | |
| 5 | ↓ | | | |

Max. Pile Tip Elev. = 404'

| PIER 129B | | | | |
|---|---|---|---|---|
| Pile Nº | Cutoff Elevation | Tip of Pile Elevation As Driven | Length of Pile in Place | Calculated Bearing Capacity-Tons |
| 1 | 435.36 | | | |
| 2 | ↓ | | | |
| 3 | | | | |
| 4 | ↓ | | | |
| 5 | 435.40 | | | |
| 6 | ↓ | | | |
| 7 | | | | |
| 8 | ↓ | | | |

Max. Pile Tip Elev. = 404'

| PIER 130A | | | | |
|---|---|---|---|---|
| Pile Nº | Cutoff Elevation | Tip of Pile Elevation As Driven | Length of Pile in Place | Calculated Bearing Capacity-Tons |
| 1 | 435.87 | | | |
| 2 | ↓ | | | |
| 3 | | | | |
| 4 | | | | |
| 5 | ↓ | | | |
| 6 | 435.73 | | | |
| 7 | ↓ | | | |
| 8 | | | | |
| 9 | | | | |
| 10 | ↓ | | | |

Max. Pile Tip Elev. = 404'

| PIER 131E | | | | |
|---|---|---|---|---|
| Pile Nº | Cutoff Elevation | Tip of Pile Elevation As Driven | Length of Pile in Place | Calculated Bearing Capacity-Tons |
| 1 | 436.40 | | | |
| 2 | ↓ | | | |
| 3 | | | | |
| 4 | ↓ | | | |
| 5 | 436.28 | | | |
| 6 | ↓ | | | |
| 7 | | | | |
| 8 | ↓ | | | |

Max. Pile Tip Elev. = 403'

| END BENT 101E | | | | |
|---|---|---|---|---|
| Pile Nº | Cutoff Elevation | Tip of Pile Elevation As Driven | Length of Pile in Place | Calculated Bearing Capacity-Tons |
| 1 | 460.49 | | | |
| 2 | ↑ | | | |
| 3 | | | | |
| 4 | | | | |
| 5 | | | | |
| 6 | | | | |
| 7 | | | | |
| 8 | | | | |
| 9 | ↓ | | | |
| 10 | 460.49 | | | |

Max. Pile Tip Elev. = 401'

SHEET 36

PILE RECORD

DESIGNED BY RHVE DATE
DETAILED BY DATE
TRACED BY DATE
CHECKED BY TRB DATE 3-75
CHECKED BY DATE
CHECKED BY DATE
REVISED DATE
REVISED DATE
REVISED DATE

**COMMONWEALTH OF KENTUCKY**
BUREAU OF HIGHWAYS
FRANKFORT
COUNTY OF
**JEFFERSON**
**LOUISVILLE-LEXINGTON**
ROAD
STATION 267+00 P. E. PROJECT NO. I64-2(92)

| CONSTRUCTION PROJECT NO. | MAINTENANCE PROJECT NO. | DRAWING NO. |
|---|---|---|
| | | 19238 |

| FED. ROAD DIST. | STATE | FED. AID PRO. NO. | FISCAL YEAR | SHEET NO. | TOTAL SHEETS |
|---|---|---|---|---|---|
| 7 | KY. | | | | |

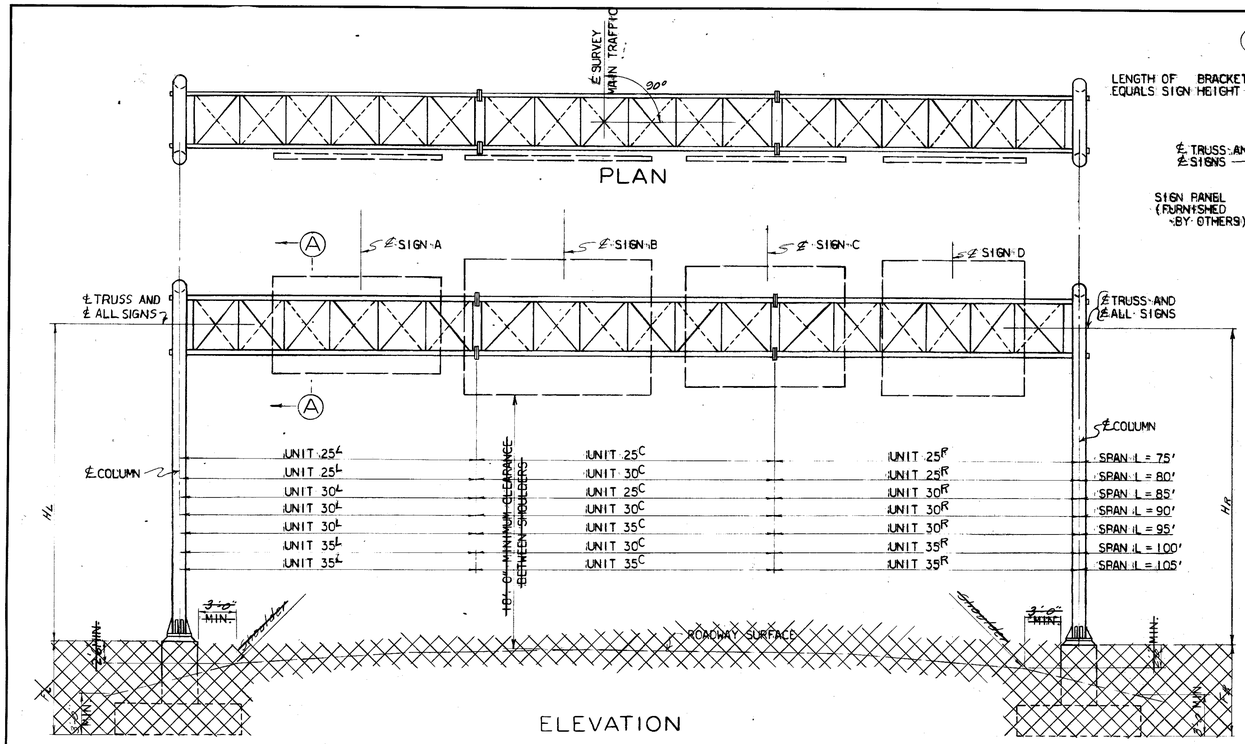


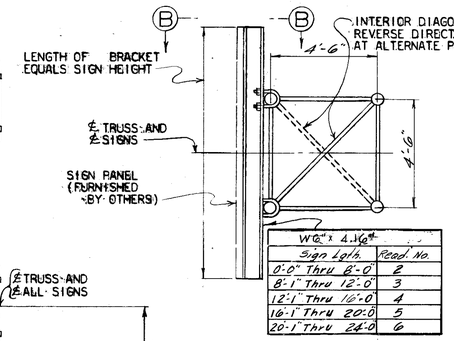


| WG. x 4.WG. Sign Lgth. | Read. No. |
|---|---|
| 0'-0" Thru 8'-0" | 2 |
| 8'-1" Thru 12'-0" | 3 |
| 12'-1" Thru 16'-0" | 4 |
| 16'-1" Thru 20'-0" | 5 |
| 20'-1" Thru 24'-0" | 6 |

SECTION A-A

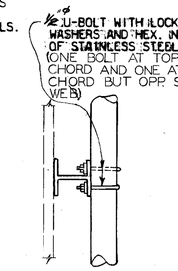


SECTION B-B

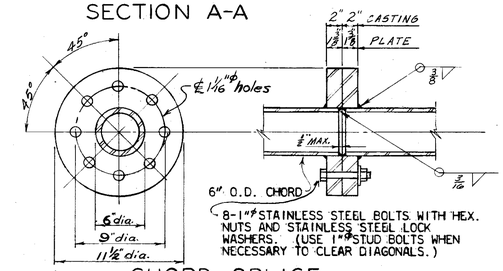


CHORD SPLICE
(PLATE OR CASTING)

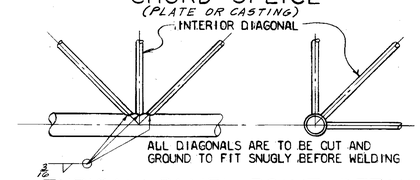


TYPICAL PANEL POINT DETAIL

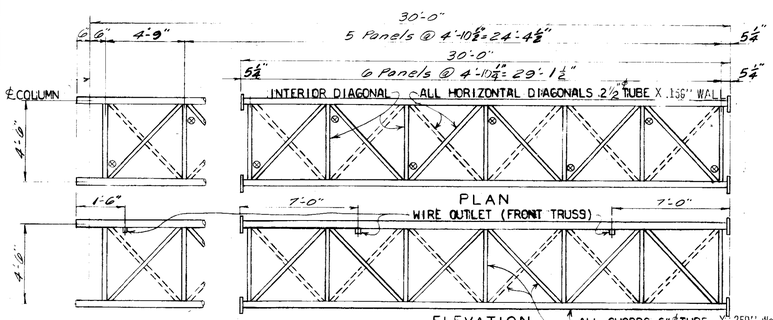


UNIT $30^L$ AS SHOWN
UNIT $30^R$ OPP. HAND

ELEVATION
UNIT $30^C$

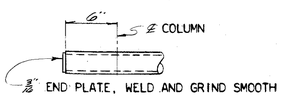


CHORD END DETAIL

| L | X |
|---|---|
| 75' | 2 1/4" |
| 80' | 2 3/8" |
| 85' | 2 1/2" |
| 90' | 3" |
| 95' | 3 1/8" |
| 100' | 3 5/8" |
| 105' | 3 3/4" |

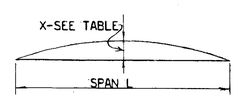


CAMBER DIAGRAM

NOTE: MEMBERS SHOWN BY DASHED LINES ARE IN THE FAR SIDE OF UNIT.

⊗ DENOTES END OF INTERIOR DIAGONAL THAT IS AT TOP CHORD.

| SUPPORT NO. | STATION | SPAN L | SUPPORT HEIGHT $H_L$ | SUPPORT HEIGHT $H_R$ | FOOTING HEIGHT $F_L$ | FOOTING HEIGHT $F_R$ |
|---|---|---|---|---|---|---|
| 1 | 263+95.2 | 83'-3" | 23'-8" | 24'-10 1/2" | | |
| | | | | | | |
| | | | | | | |
| | | | | | | |

| SUPPORT NO. | SIGN A NO. | HORIZ | VERT | AREA | SIGN B NO. | HORIZ | VERT | AREA | SIGN C NO. | HORIZ | VERT | AREA | SIGN D NO. | HORIZ | VERT | AREA |
|---|---|---|---|---|---|---|---|---|---|---|---|---|---|---|---|---|
| 1 | 1 | 28'-0" | 12'-0" | 336□' | | | | | | | | | 2 | 14'-0" | 12'-0" | 168□' |
| | | | | | | | | | | | | | | | | |
| | | | | | | | | | | | | | | | | |
| | | | | | | | | | | | | | | | | |

Note: Fabricator shall modify length of a Standard Unit to make the required "Span L" of Sign Support. Sign information does not include "Exit No." signs.

## GENERAL NOTE

SPECIFICATIONS: THE KENTUCKY DEPARTMENT OF HIGHWAYS STANDARD SPECIFICATIONS FOR ROAD AND BRIDGE CONSTRUCTION, CURRENT EDITION WITH REVISIONS, SHALL APPLY TO THIS PROJECT.

DESIGN: DESIGNED FOR A SIGN AREA OF 600 SQ FT IN ACCORDANCE WITH "SPECIFICATIONS FOR DESIGN AND CONSTRUCTION OF STRUCTURAL SUPPORTS FOR HIGHWAY SIGNS" PUBLISHED BY AASHO, 1968 WITH WIND REDUCED TO 80 MPH IN ACCORDANCE WITH IM 40-1-69 OF THE FEDERAL HIGHWAY ADMINISTRATION.

SUPERELEVATION OF ROADWAY: THE CONTRACTOR SHALL ALLOW FOR DIFFERENCES IN ELEVATION ACROSS THE FULL SHOULDER WIDTH AS SHOWN ON THE ROADWAY PLANS IN MAINTAINING THE REQUIRED 18 FOOT MINIMUM VERTICAL CLEARANCE TO THE BOTTOM OF THE LOWEST PART OF THE SIGNS OR SUPPORTS. SIGNS ARE TO BE CENTERED OVER THE LANE OR LANES TO WHICH THEY APPLY UNLESS SHOWN OTHERWISE.

~~CONCRETE: CLASS "A" CONCRETE IS TO BE USED THROUGHOUT.~~

~~BEVELED EDGES: ALL EXPOSED CONCRETE EDGES ARE TO BE BEVELED 7/8" UNLESS OTHERWISE SHOWN.~~

~~REINFORCEMENT: DIMENSIONS FROM FACE OF CONCRETE TO BARS ARE CLEAR DISTANCES EXCEPT AS OTHERWISE SHOWN. DIMENSIONS FOR BAR SPACINGS ARE DISTANCES CENTER TO CENTER OF BARS.~~

SHOP DRAWINGS: THE CONTRACTOR SHALL SUBMIT DETAILED SHOP DRAWINGS TO THE DIVISION OF CONSTRUCTION FOR APPROVAL PRIOR TO FABRICATION IN ACCORDANCE WITH THE SPECIFICATIONS.

FABRICATION OF WELDED ALUMINUM STRUCTURES: THE ALUMINUM SIGN SUPPORT SHALL BE FABRICATED IN ACCORDANCE WITH AASHO "SPECIFICATIONS FOR THE DESIGN AND CONSTRUCTION OF STRUCTURAL SUPPORTS FOR HIGHWAY SIGNS."

MATERIAL SPECIFICATIONS: THE FOLLOWING ASTM DESIGNATIONS SHALL GOVERN ALL MATERIAL USED.

| ASTM | | MATERIAL |
|---|---|---|
| B221-72 | 72 | EXTRUDED TUBE, ALUMINUM ALLOY 6061-T6511 |
| B241-72 | 72 | PIPE, ALUMINUM ALLOY 6061-T6 |
| B308-72 | 72 | STRUCTURAL SHAPES, ALUMINUM ALLOY 6061-T6 |
| B221-72 | 72 | EXTRUDED BAR, ROD AND SHAPES, ALUMINUM ALLOY 6061-T6511 |
| B209-72a | 72a | SHEET AND PLATE, ALUMINUM ALLOY 6061-T6 |
| A320-70 | | STAINLESS STEEL HARDWARE , NUTS, BOLTS AND WASHERS |
| A165-71 | 71 | TYPE NS, CADMIUM COATING FOR ASTM A36 ANCHOR BOLTS, NUTS AND WASHERS |
| B26- 72 | 72 | SAND MOLD CASTINGS, ALUMINUM ALLOY SG70A - T6 |
| B108- 72 | 72 | PERMANENT MOLD CASTINGS, ALUMINUM ALLOY SG70B HEAT TREATED TO A TEMPER T6 INSTEAD OF TEMPER T61 |

~~FOOTINGS: ALL FOOTINGS SHALL BE POURED AGAINST UNDISTURBED EARTH AND ARE DESIGNED TO TRANSFER NO MORE THAN 1½ TONS PER SQUARE FOOT BEARING PRESSURE TO THE SOIL UNDER ANY DESIGN LOADING CONDITION.~~

VERTICAL DIMENSIONS: VERTICAL DIMENSIONS $H_R$ AND $H_L$ SHALL NOT EXCEED 27' ~~AND THE COMBINED DIMENSIONS ($H_R + F_R$) OR ($H_L + F_L$) SHALL NOT EXCEED 36'.~~

MILL TEST REPORTS: NOTARIZED TEST REPORTS IN TRIPLICATE SHALL BE FURNISHED THE DEPARTMENT OF HIGHWAYS STATING THAT THE MATERIALS USED CONFORM TO THE SPECIFICATIONS.

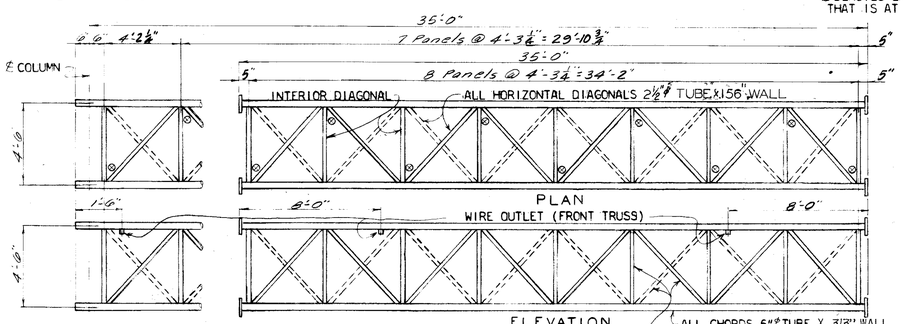


UNIT $35^L$ AS SHOWN
UNIT $35^R$ OPP. HAND

ELEVATION
UNIT $35^C$

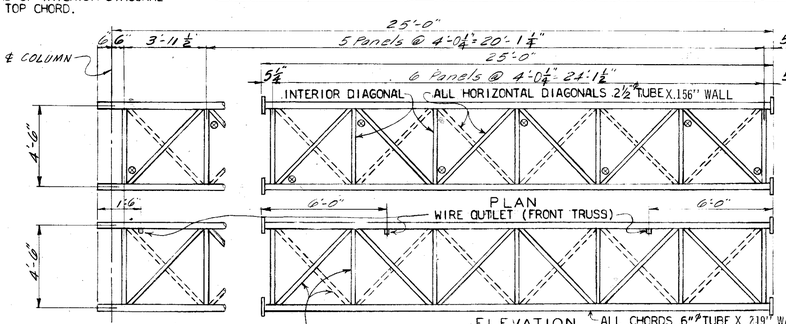


UNIT $25^L$ AS SHOWN
UNIT $25^R$ OPP. HAND

ELEVATION
UNIT $25^C$

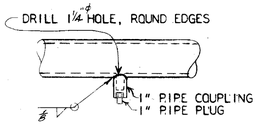


WIRE OUTLET DETAIL

SIGN SUPPORT

Sheet 1 of 2

SHEET 37

| DESIGNED BY | CHECKED BY | DATE 11-66 |
|---|---|---|
| DETAILED BY | CHECKED BY | DATE 12-72 |
| TRACED BY | CHECKED BY | DATE |
| REVISED ASTM Nos. & Added Castings | | DATE 2/73 |
| REVISED Dwgs. for 1968 Specs. City Column Light Office | | DATE 7/73 |
| REVISED | | DATE |

**COMMONWEALTH OF KENTUCKY**
**DEPARTMENT OF HIGHWAYS**
**FRANKFORT**

STANDARD OVERHEAD SIGN SUPPORTS 75' TO 105' SPANS ALUMINUM

STATION | PROJECT NO.

APPROVED STATE HIGHWAY ENGINEER

DRAWING NO. 19238 | INDEX

| FED. ROAD DIST. | STATE | FED. AID PRO. NO. | FISCAL YEAR | SHEET NO. | TOTAL SHEETS |
|---|---|---|---|---|---|
| 7 | KY. | | | | |

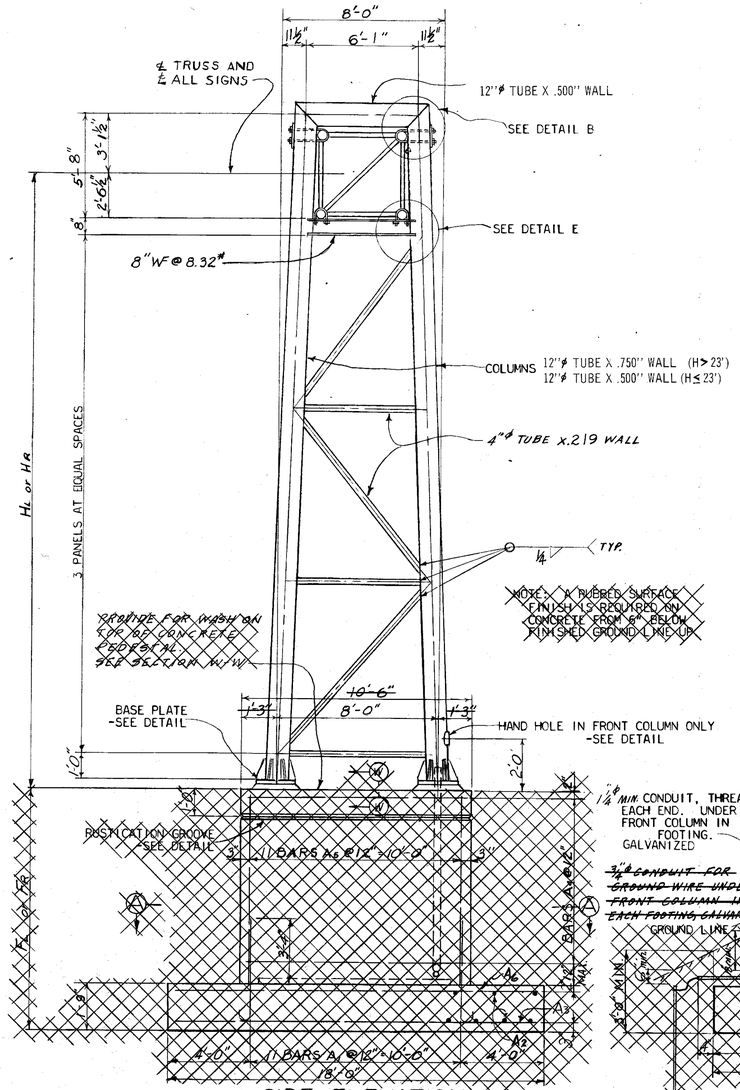


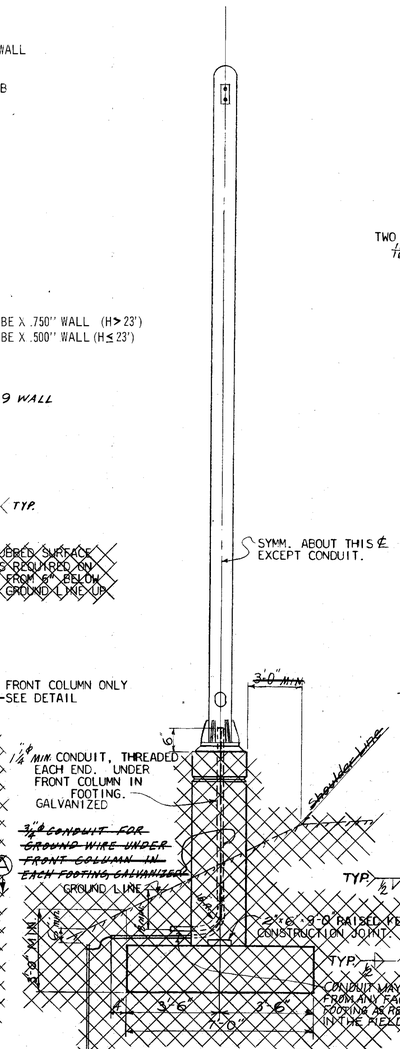


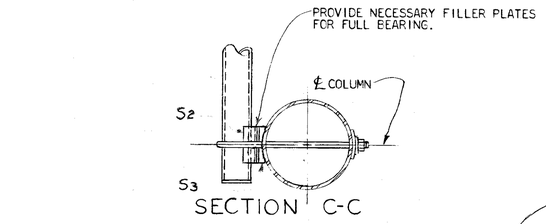


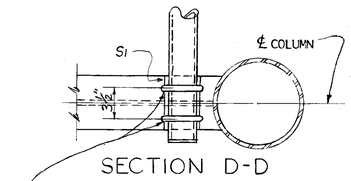


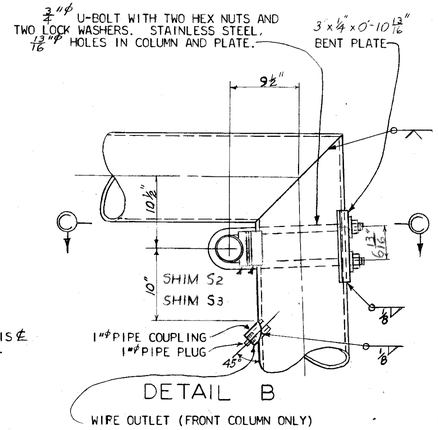


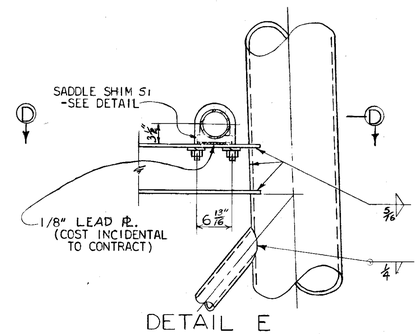





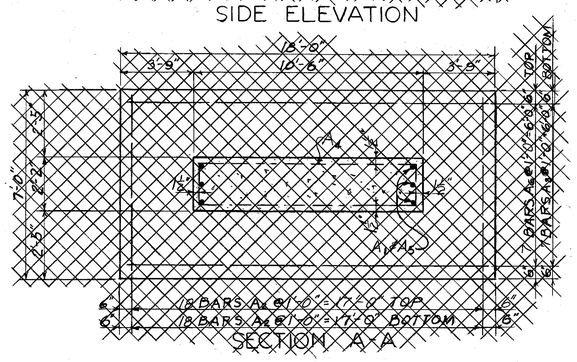


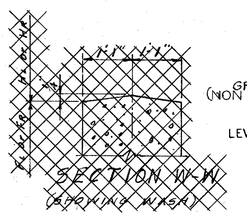


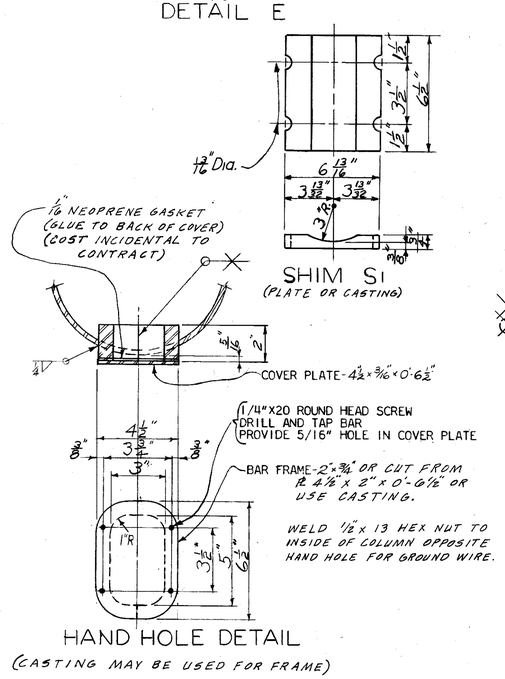


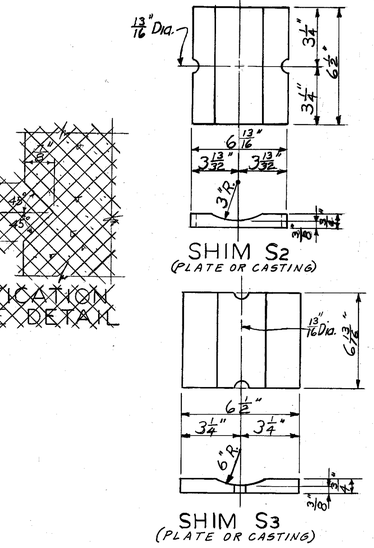


## BILL OF REINFORCEMENT FOR ONE FOOTING

| Mark | Type | No. | Size | Length Ft. | Length In. | Location |
|---|---|---|---|---|---|---|
| A1 | 1 | 24 | #6 | 5 | 0 | FOOTING AND WALL |
| A2 | Str. | 86 | #5 | 6 | 6 | " |
| A3 | Str. | 7 | #8 | 17 | 8 | " |
| A4 | ⌀ | Varies | #4 | 2 | 1 | WALL |
| A5 | Str. | 24 | #5 | 5 | 11 | " |
| A6 | Str. | 7 | #5 | 17 | 8 | FOOTING |

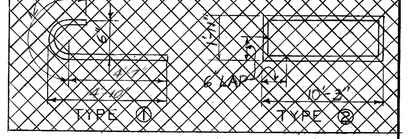


* ~~APPROX. ESTIMATE IS FOR INFORMATION ONLY. FL AND FR SHALL BE DETERMINED BY THE ENGINEER IN THE FIELD.~~

## ESTIMATE OF QUANTITIES * FOR ONE FOOTING

| | F-6.0 | ADDITIONAL PER WALL |
|---|---|---|
| CONCRETE, CLASS "AX" | 11.7 CU.YD. | 0.8 CU.YD. |
| REINFORCEMENT | 1097 LBS. | 42 LBS. |

DESIGNED BY: CHECKED BY:
DETAILED BY: T. G. K. CHECKED BY:
TRACED BY: CHECKED BY:

| REVISED | DATE |
|---|---|
| Added Cautions Changed Conduit | 11/66 |
| Dwgs. for 1963 Specs. City Columbus Office | 12/72 |

**COMMONWEALTH OF KENTUCKY**
**DEPARTMENT OF HIGHWAYS**
**FRANKFORT**

STANDARD OVERHEAD SIGN SUPPORTS 75' TO 105' SPANS ALUMINUM

STATION PROJECT NO.

APPROVED STATE HIGHWAY ENGINEER

DRAWING NO. 19238 INDEX

Sheet 2 of 2
SHEET 38

SIGN SUPPORT

| FED. ROAD DIST. | STATE | FED. AID PROJ. NO. | FISCAL YEAR | SHEET NO. | TOTAL SHEETS |
|---|---|---|---|---|---|
| 7 | KY. | | | | |

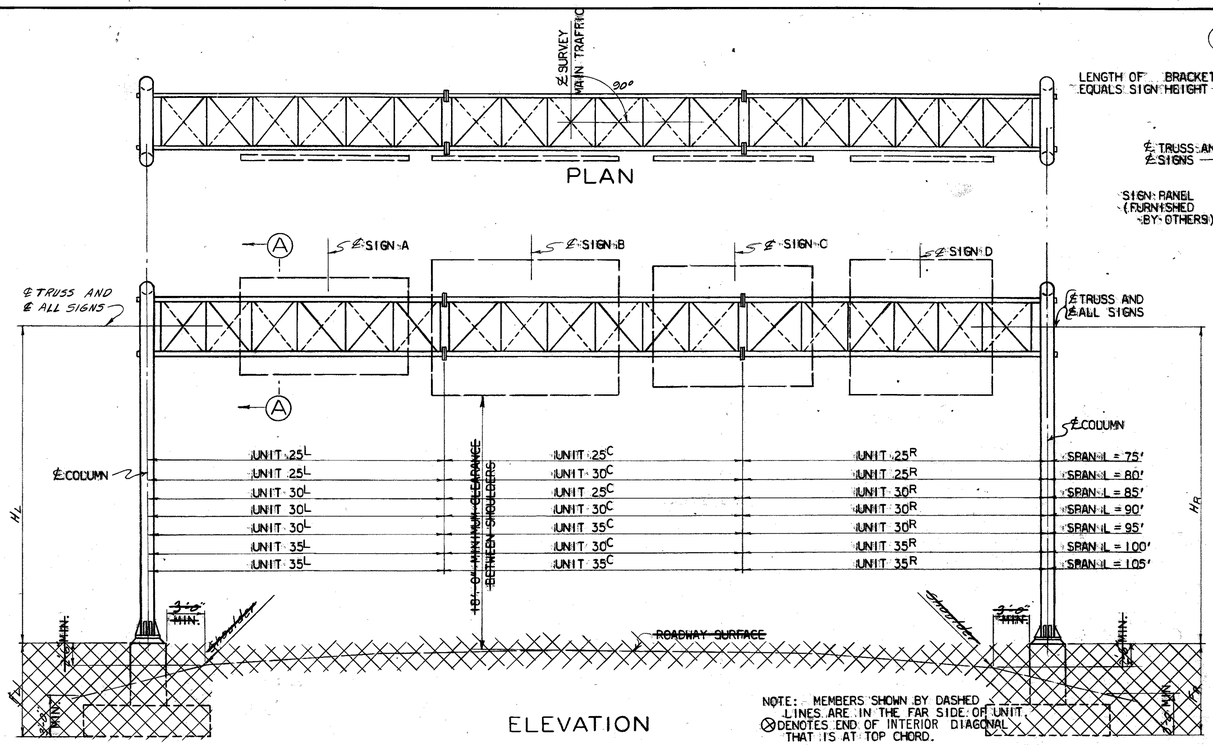


NOTE: MEMBERS SHOWN BY DASHED LINES ARE IN THE FAR SIDE OF UNIT.
⊗ DENOTES END OF INTERIOR DIAGONAL THAT IS AT TOP CHORD.

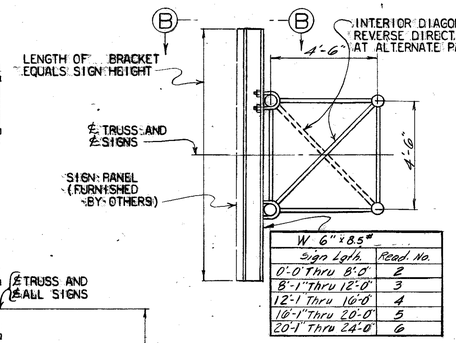


| W 6" x 8.5# | |
|---|---|
| Sign Lgth. | Read. No. |
| 0'-0" Thru 8'-0" | 2 |
| 8'-1" Thru 12'-0" | 3 |
| 12'-1" Thru 16'-0" | 4 |
| 16'-1" Thru 20'-0" | 5 |
| 20'-1" Thru 24'-0" | 6 |

SECTION A-A

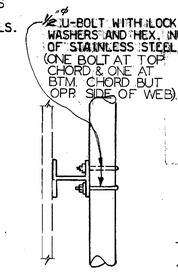


SECTION B-B

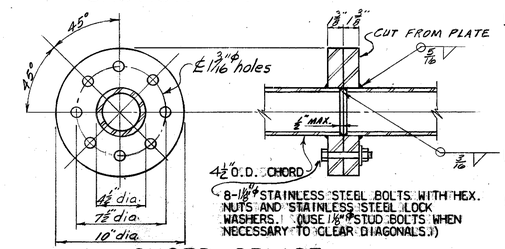


CHORD SPLICE

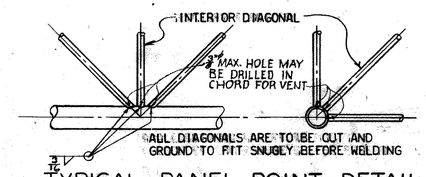


TYPICAL PANEL POINT DETAIL

## GENERAL NOTE

SPECIFICATIONS: THE KENTUCKY DEPARTMENT ~~OF HIGHWAYS STANDARD SPECIFICATIONS FOR ROAD AND BRIDGE~~ CONSTRUCTION, CURRENT EDITION WITH REVISIONS, SHALL APPLY TO THIS PROJECT.

DESIGN: DESIGNED FOR A SIGN AREA OF 600 SQ FT IN ACCORDANCE WITH "SPECIFICATIONS FOR THE DESIGN AND CONSTRUCTION OF STRUCTURAL SUPPORTS FOR HIGHWAY SIGNS" PUBLISHED BY AASHO, 1968 WITH THE WIND REDUCED TO 80 MPH IN ACCORDANCE WITH IM 40-1-69 OF THE FEDERAL HIGHWAY ADMINISTRATION.

SUPERELEVATION OF ROADWAY: THE CONTRACTOR SHALL ALLOW FOR DIFFERENCES IN ELEVATION ACROSS THE FULL ~~SHOULDER WIDTH AS SHOWN ON THE ROADWAY PLANS IN MAINTAINING THE REQUIRED 18 FOOT MINIMUM VERTICAL~~ CLEARANCE TO THE BOTTOM OF THE LOWEST PART OF THE SIGNS OR SUPPORT. SIGNS ARE TO BE CENTERED OVER THE LANE OR LANES TO WHICH THEY APPLY UNLESS SHOWN OTHERWISE.

~~CONCRETE: CLASS "A" CONCRETE IS TO BE USED THROUGHOUT.~~

~~BEVELED EDGES: ALL EXPOSED CONCRETE EDGES ARE TO BE BEVELED 7/8" UNLESS OTHERWISE SHOWN.~~

~~REINFORCEMENT: DIMENSIONS FROM FACE OF CONCRETE TO BARS ARE CLEAR DISTANCES EXCEPT AS OTHERWISE SHOWN. DIMENSIONS FOR BAR SPACINGS ARE DISTANCES CENTER TO CENTER OF BARS.~~

SHOP DRAWINGS: THE CONTRACTOR SHALL SUBMIT DETAILED SHOP DRAWINGS TO THE DIVISION OF CONSTRUCTION FOR APPROVAL PRIOR TO FABRICATION IN ACCORDANCE WITH THE SPECIFICATIONS.

FABRICATION: THE SIGN SUPPORT SHALL BE FABRICATED IN ACCORDANCE WITH THE SPECIFICATIONS. ALL METAL COMPONENTS OF THE SUPPORT EXCEPT THE STAINLESS STEEL HARDWARE SHALL BE HOT-DIP GALVANIZED AFTER ALL FABRICATION HAS BEEN COMPLETED. THE GALVANIZED MATERIAL SHALL BE LOADED, HAULED, AND HANDLED IN SUCH A MANNER THAT THE GALVANIZING WILL NOT BE DAMAGED. ALL ABRADED AND DAMAGED SURFACES SHALL BE REGALVANIZED OR REPAIRED BY PAINTING WITH TWO COATS OF ZINC OXIDE, ZINC DUST PAINT CONFORMING TO THE REQUIREMENTS OF FEDERAL SPECIFICATION MIL-P-15145. THE PAINT IS TO BE PROPERLY COMPOUNDED IN A SUITABLE VEHICLE IN THE RATIO OF ONE PART ZINC OXIDE TO FOUR PARTS ZINC DUST, BY WEIGHT. ALL REPAIRS ARE TO BE AS DIRECTED BY THE ENGINEER.

MILL TEST REPORTS: NOTARIZED TEST REPORTS IN TRIPLICATE SHALL BE FURNISHED THE DEPARTMENT OF HIGHWAYS STATING THAT THE MATERIALS USED CONFORM TO THE SPECIFICATIONS.

WELDERS AND WELDING PROCEDURE: WELDED FABRICATION SHALL BE LIMITED TO THE INERT-GAS SHIELDED, TUNGSTEN OR CONSUMABLE ELECTRODE METHODS OF ARC WELDING. WELDING PROCEDURE, WELDERS AND WELDING OPERATORS SHALL BE QUALIFIED ACCORDING TO SECTION IX OF THE ASME BOILER AND PRESSURE VESSEL CODE, 1971 EDITION; PART A, REQUIREMENTS FOR FERROUS METALS. CERTIFIED COPIES IN TRIPLICATE OF ASME BOILER CODE, APPENDIX II, QUALIFICATION TEST FORMS Q-I, Q-IG AND Q-IF SHALL BE SUBMITTED TO THE DEPARTMENT OF HIGHWAYS. THE PERTINENT FORMS SHALL INDICATE ACCEPTABLE QUALIFICATION OF WELDING PROCEDURES AND WELDER PERFORMANCE ON GROOVE AND FILLET WELDS.

MATERIAL SPECIFICATIONS: THE FOLLOWING ASTM DESIGNATIONS SHALL GOVERN ALL MATERIALS USED:

| ASTM | MATERIAL |
|---|---|
| A53-71a | GRADE B SEAMLESS STEEL PIPE GALVANIZED IN ACCORDANCE WITH ASTM A-123 |
| A36-70a | STRUCTURAL SHAPES, PLATES, BARS AND ANCHOR BOLTS, GALVANIZED IN ACCORDANCE WITH ASTM A-123 |
| A320-70 | STAINLESS STEEL HARDWARE - NUTS, BOLTS AND WASHERS |
| A106-71 | GRADE B SEAMLESS CARBON STEEL PIPE GALVANIZED IN ACCORDANCE WITH ASTM A-123 MAY BE USED FOR PIPE LESS THAN 2" |
| A27-71 | CARBON STEEL CASTING - GRADE 70-36 |

~~FOOTINGS: ALL FOOTINGS SHALL BE POURED AGAINST UNDISTURBED EARTH AND ARE DESIGNED TO TRANSFER NO MORE THAN 1½ TONS PER SQUARE FOOT BEARING PRESSURE TO THE SOIL UNDER ANY DESIGN LOADING CONDITION.~~

VERTICAL DIMENSIONS: VERTICAL DIMENSIONS $H_R$ AND $H_L$ SHALL NOT EXCEED 27' ~~AND THE COMBINED DIMENSIONS ($H_R + F_R$) OR ($H_L + F_L$) SHALL NOT EXCEED 36'.~~

*Note: Fabricator shall modify length of a Standard Unit to make the required "Span L" of Sign Support. Sign information does not include "Exit No." signs.*

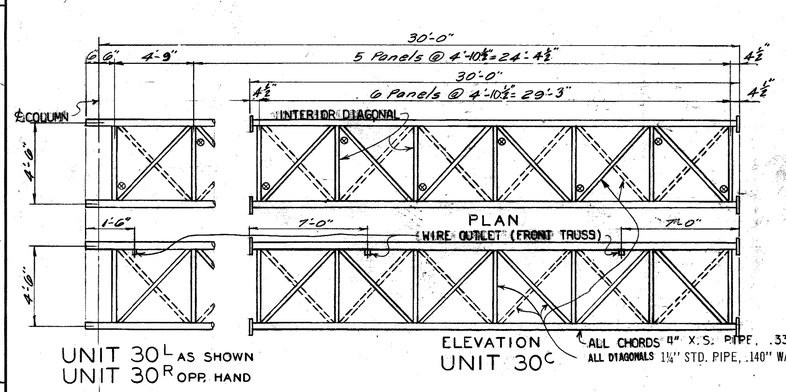


UNIT $30^L$ AS SHOWN
UNIT $30^R$ OPP. HAND

UNIT $30^C$

ALL CHORDS 4" X S. PIPE, .337" WALL
ALL DIAGONALS 1¼" STD. PIPE, .140" WALL

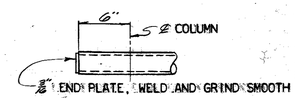


CHORD END DETAIL

| L | X |
|---|---|
| 75' | 2 3/4" |
| 80' | 2 3/4" |
| 85' | 2 3/4" |
| 90' | 3" |
| 95' | 3 1/4" |
| 100' | 3 1/2" |
| 105' | 3 3/4" |

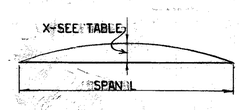


CAMBER DIAGRAM

| SUPPORT NO. | STATION | SPAN L | SUPPORT HEIGHT $H_L$ | SUPPORT HEIGHT $H_R$ | FOOTING HEIGHT $F_L$ | FOOTING HEIGHT $F_R$ |
|---|---|---|---|---|---|---|
| 1 | 263+95.2 | 83'-3" | 23'-8" | 24'-10½" | | |
| | | | | | | |
| | | | | | | |
| | | | | | | |

| SUPPORT NO. | SIGN A NO. | HORIZ | VERT | AREA | SIGN B NO. | HORIZ | VERT | AREA | NEW SIGN C NO. | HORIZ | VERT | AREA | SIGN D NO. | HORIZ | VERT | AREA |
|---|---|---|---|---|---|---|---|---|---|---|---|---|---|---|---|---|
| 1 | 1 | 28'-0" | 12'-0" | 336□' | | | | | | | | | 2 | 14'-0" | 12'-0" | 168□' |
| | | | | | | | | | | | | | | | | |
| | | | | | | | | | | | | | | | | |
| | | | | | | | | | | | | | | | | |

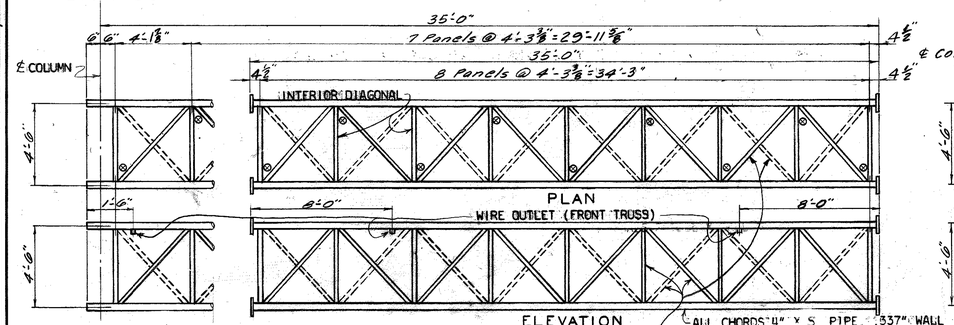


UNIT $35^L$ AS SHOWN
UNIT $35^R$ OPP. HAND

UNIT $35^C$

ALL CHORDS 4" X S PIPE, .337" WALL
ALL DIAGONALS 1¼" STD. PIPE, .140" WALL

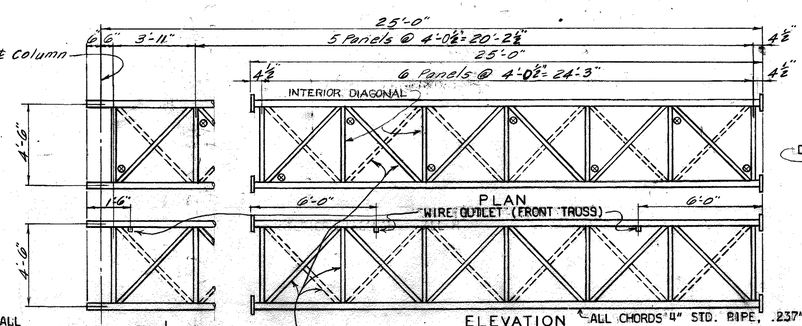


UNIT $25^L$ AS SHOWN
UNIT $25^R$ OPP. HAND

UNIT $25^C$

ALL CHORDS 4" STD. PIPE, .237" WALL
ALL DIAGONALS 1¼" STD. PIPE, .140" WALL

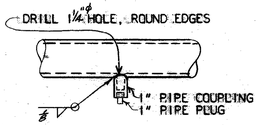


WIRE OUTLET DETAIL

SIGN SUPPORT

Sheet 1 of 2
SHEET 39

**COMMONWEALTH OF KENTUCKY**
**DEPARTMENT OF HIGHWAYS**
**FRANKFORT**

STANDARD OVERHEAD SIGN SUPPORTS 75' TO 105' SPANS GALVANIZED STEEL

STATION | PROJECT NO.

APPROVED: D. A. Brown, STATE HIGHWAY ENGINEER

DRAWING NO. 19238 | INDEX

DESIGNED BY: M. J. Lynch | CHECKED BY: | DATE: 7/62
DETAILED BY: Stratton | CHECKED BY: T.G.T. | DATE: 2/63
TRACED BY: | CHECKED BY: | DATE:
REVISED: ASTM Nos. Added, Castings. | DATE: 11/66
REVISED: Dwgs. to 1968 Specs. Clg. Tolerance, Misc. | DATE: 12/72
REVISED: | DATE:

| FED. ROAD DIST. | STATE | FED. AID PRO. NO. | FISCAL YEAR | SHEET NO. | TOTAL SHEETS |
|---|---|---|---|---|---|
| 7 | KY. | | | | |

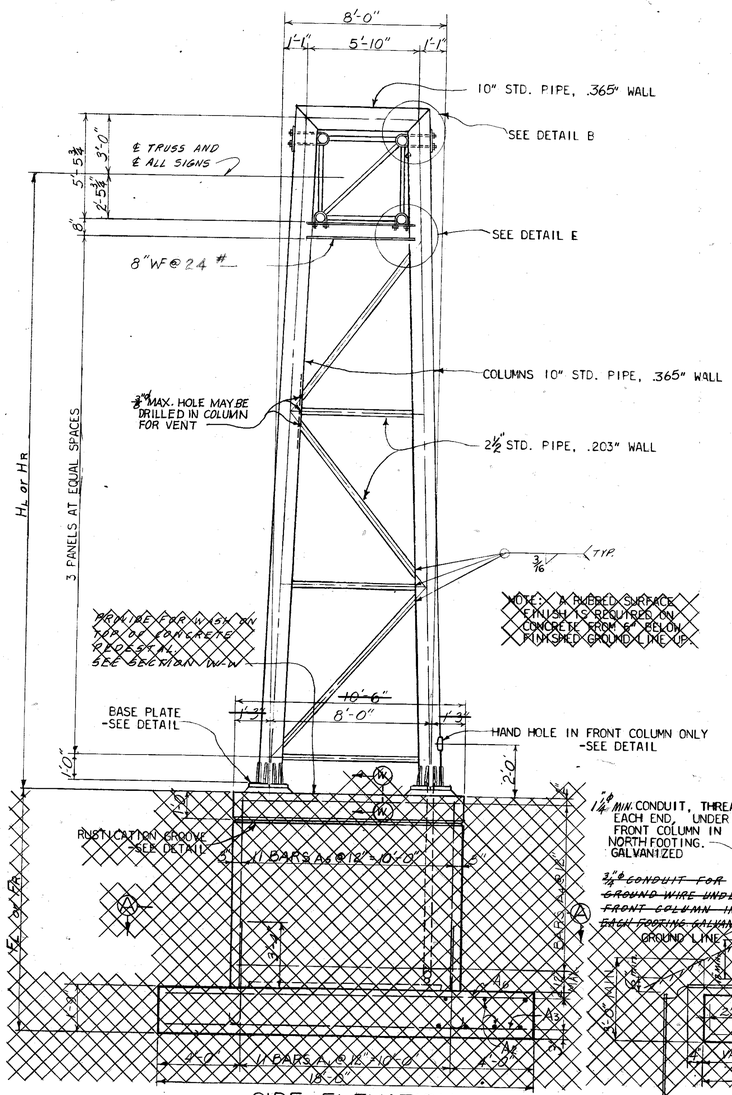


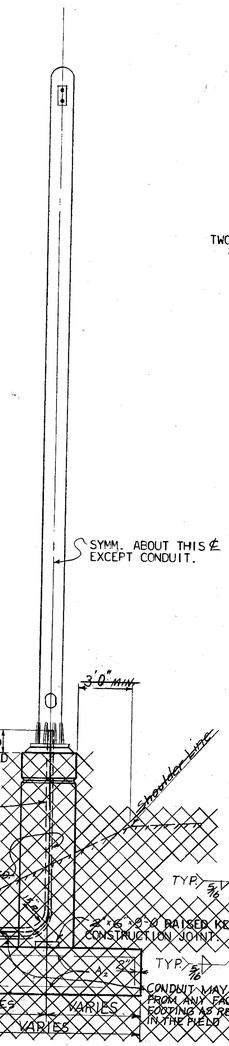


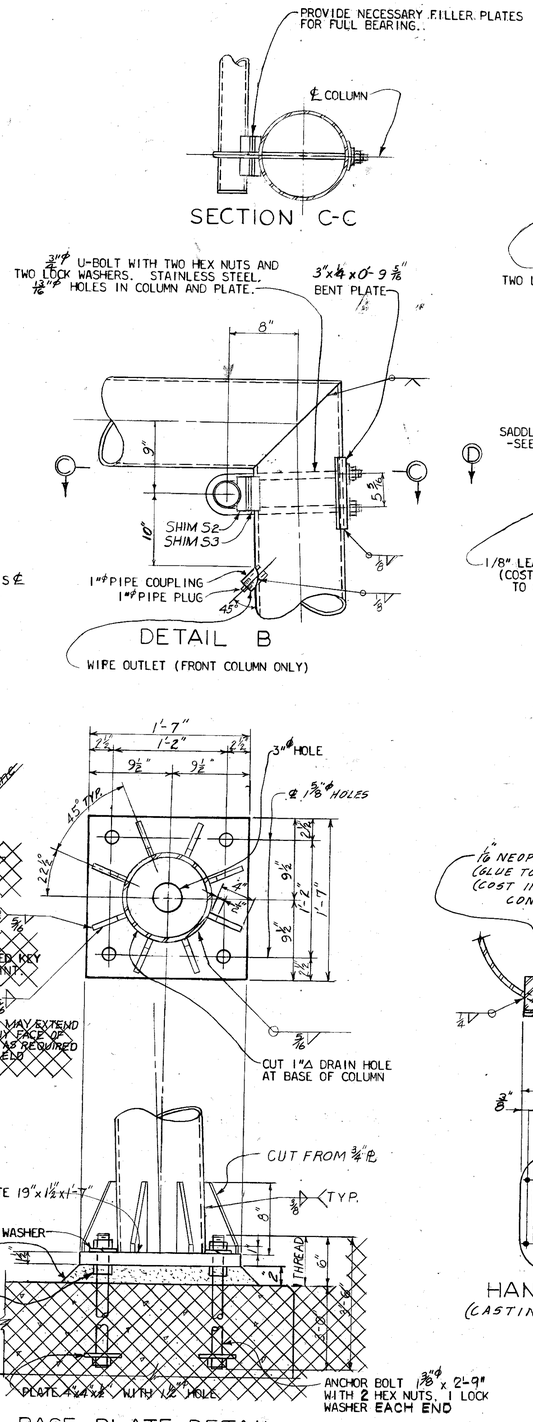


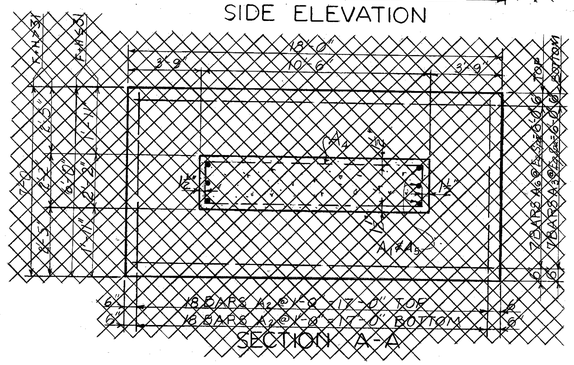


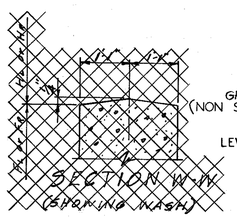


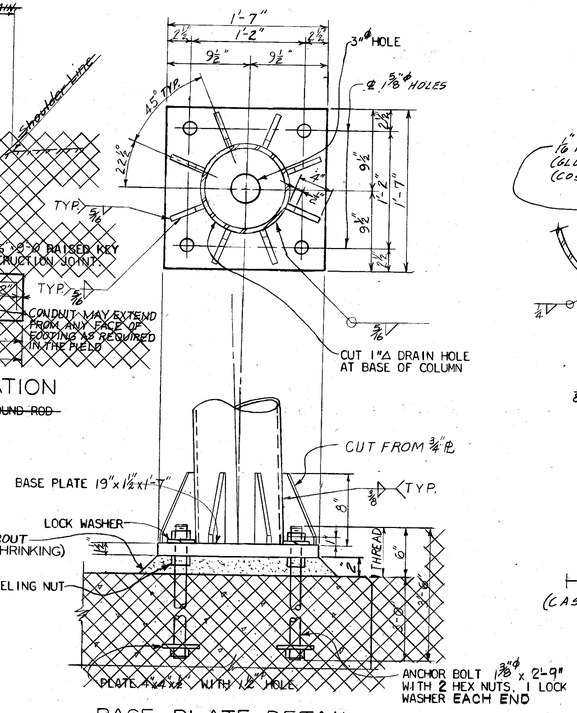


## BILL OF REINFORCEMENT FOR ONE FOOTING

| Mark | Type | No. | Size | Length | Weight |
|---|---|---|---|---|---|
| A1 | O | 24 | #6 | 5 | FOOTING AND WALL |
| A2 | 31 | 30 | #6 | 7 | 8 |
| A3 | 31 | 7 | #6 | 7 | 8 |
| A4 | O | Varies | #4 | Varies | WALL |
| A5 | 31 | 24 | #6 | 17 | 11 |
| A6 | 31 | 7 | #6 | 17 | 8 | FOOTING |

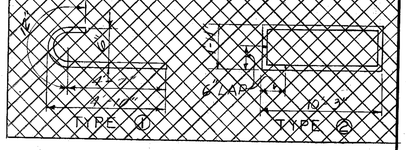


* ~~APPROX. ESTIMATE IS FOR INFORMATION ONLY. $F_L$ AND $F_R$ SHALL BE DETERMINED BY THE ENGINEER IN THE FIELD.~~

## ESTIMATE OF QUANTITIES * FOR ONE FOOTING

| | 8" Dia. F+H=31 | | ADDITIONAL 1" OF WALL | |
|---|---|---|---|---|
| CONC. CLASS "A" | 18.6 C.Y. | | 2.4 | C.Y. |
| REINFORCEMENT | 1057 LBS. | 1859 LBS. | 112 | LBS. |

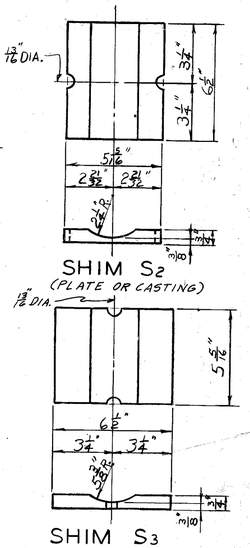

Sheet 2 of 2
SHEET 40

| DESIGNED BY | CHECKED BY | DATE |
|---|---|---|
| DETAILED BY T. G. T. | CHECKED BY | DATE 2/63 |
| TRACED BY | CHECKED BY | DATE |

REVISED Added Castings, Changed Conduit DATE 11/66
REVISED Copy for Web Press, Dig. Above Hi-Mast DATE 12/72
REVISED DATE
REVISED DATE

**COMMONWEALTH OF KENTUCKY**
**DEPARTMENT OF HIGHWAYS**
**FRANKFORT**

STANDARD OVERHEAD SIGN SUPPORTS 75' TO 105' SPANS GALVANIZED STEEL

STATION PROJECT NO.

APPROVED STATE HIGHWAY ENGINEER

DRAWING NO. 19238 INDEX

SIGN SUPPORT

LETTING DATE

PILE DRIVER DATA (For existing piles)
Size & Make of Hammer: McKiernan-Terry D30
Actual Stroke: 6-7 feet
Weight of Ram: 2800 lbs.
Blows Per Minute: 60

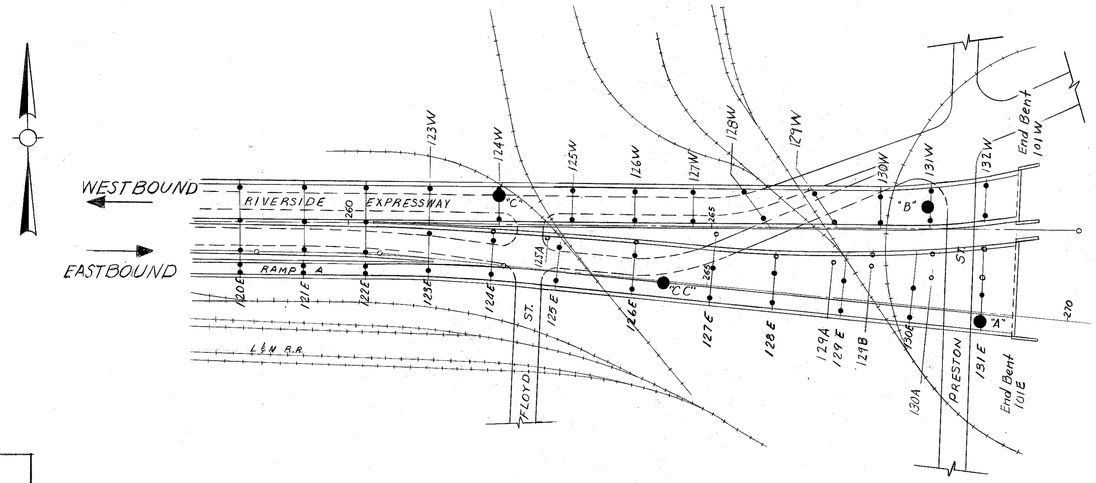


PLAN
Scale: 1"=100'

| EXISTING PILE DATA | | | | |
|---|---|---|---|---|
| FOOTING NO. | (1) PILE TIP ELEV. (FT) | (2) BLOWS PER FT. | (3) BRG. CAPACITY (TON.) | (4) DISTANCE DRIVEN (IN.) |
| 124E | 405± | 234 | 96 min. | 1/4 |
| 125E | 406± | * 95 (7) | 96 min. | * 1/4 |
| 126E | 406± | 185 (6) | 96 min. | 3/4 |
| 127E | 406± | 188 (6) | 96 min. | 1/4 |
| 128E | 404± | 180 (7) | 112 min. | 1/4 |
| 129E | 404± | 188 (6) | 96 min. | 3/8 |
| 130E | 404± | 122 (7) | 96 min. | 3/4 |
| 131E | 403± | 188 (7) | 108 min. | 3/8 |
| Bent 101E | 402± | 160 (6) | 96 min | 3/4 |
| 124W | 405± | 113 (7) | 86 min. | 1 |
| 125W | 406± | 240 (6) | 112 min. | 1/2 |
| 126W | 405± | *140 (6) | 96 min. | * 7/8 |
| 127W | 405± | 170 (6) | 102 min. | 3/4 |
| 128W | 405± | 180 (6) | 96 min. | 5/8 |
| 129W | 404± | 180 (7) | 86 min. | 5/8 |
| 130W | 404± | 200 (6) | 96 min. | 3/8 |
| 131W | 404± | 190 (7) | 102 min. | 1/2 |
| 132W | 403± | *240 (6) | 86 min. | * 1/8 |
| Bent 101W | 400± | 100 (7) | 96 min. | 1 1/8 |

(1) Average elevation of pile tip in footing.

(2) Number of blows on test pile for last ft. driven or the number of blows for the last (X) inches.

(3) This value is the smallest in the specified footing. (Determined by formula)

(4) Distance driven in the last 10 blows of driving the pile.

Note: The above data is for the south footing on the westbound roadway and the north footing on the eastbound. An * indicates the data is obtained from the adjacent footing of the same pier.

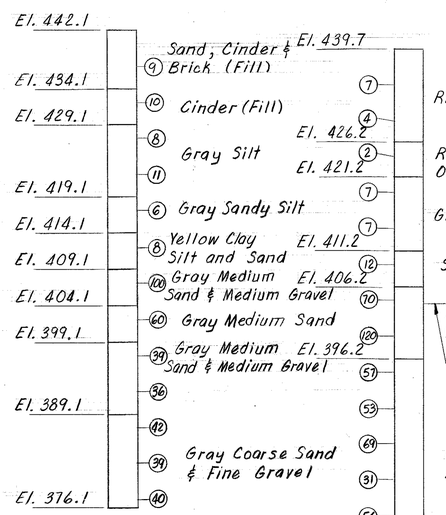


BORING "CC"

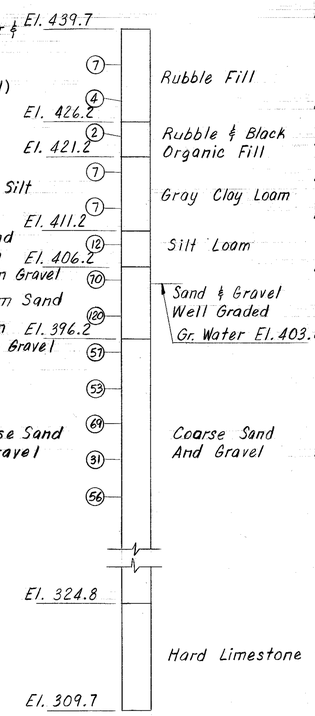


BORING "C"

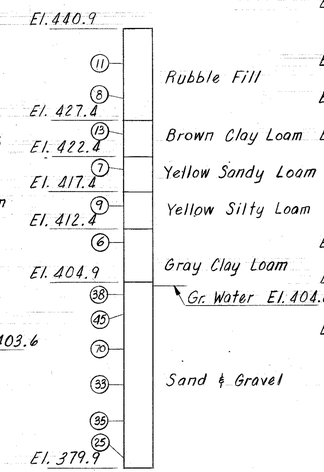


BORING "B"

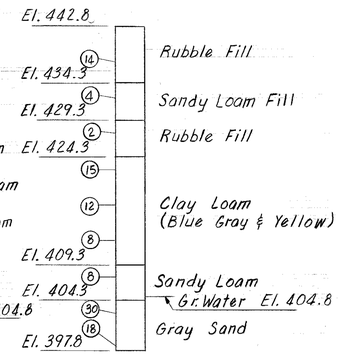


BORING "A"

Note: Borings were copied from design plans for the existing structure "I64-3rd St. to Preston St." Dwg 15754

Vertical Scale: 1"=10'

LOG OF SOUNDINGS

Sheet No. 41

COMMONWEALTH OF KENTUCKY
BUREAU OF HIGHWAYS
FRANKFORT
COUNTY OF
JEFFERSON
LOUISVILLE-LEXINGTON ROAD
STATION 267+00 P. E. PROJECT NO. I64-2(92)

| CONSTRUCTION PROJECT NO. | MAINTENANCE PROJECT NO. | DRAWING NO. |
|---|---|---|
| | | 19238 |

DESIGNED BY ___ CHECKED BY ___ DATE ___ REVISED ___
DETAILED BY ___ CHECKED BY ___ DATE ___ REVISED ___
TRACED BY LW CHECKED BY R.H.C. DATE Mar 75 REVISED ___

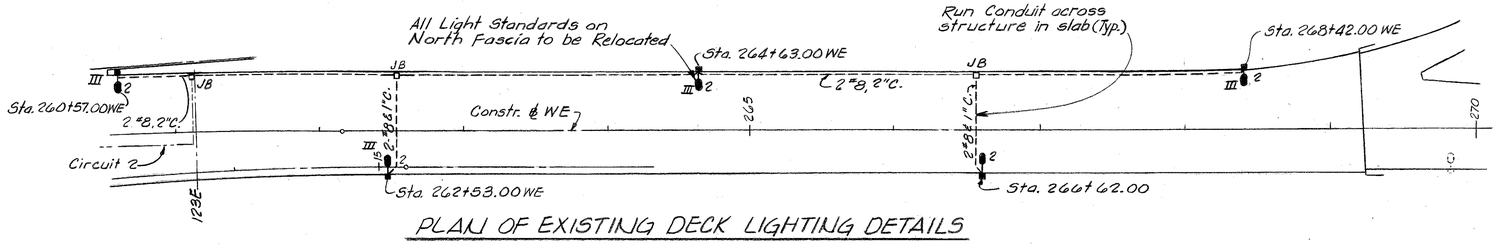


PLAN OF EXISTING DECK LIGHTING DETAILS

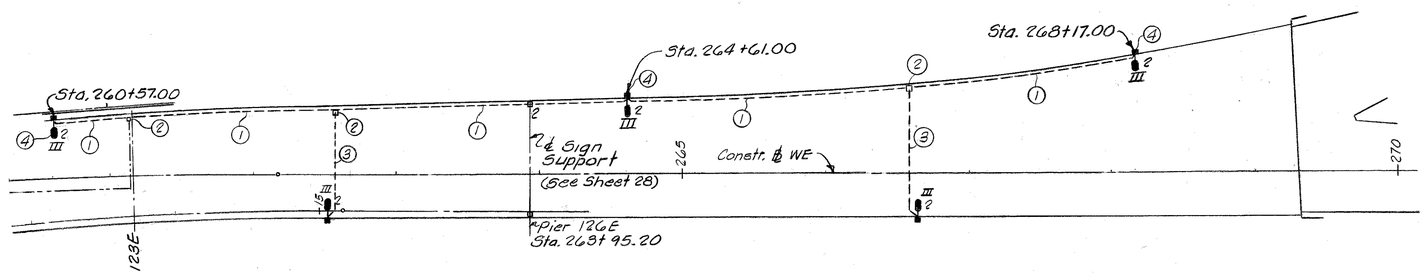


PLAN OF NEW DECK LIGHTING DETAILS

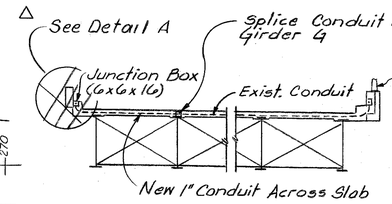


CONDUIT IN BRIDGE SLAB

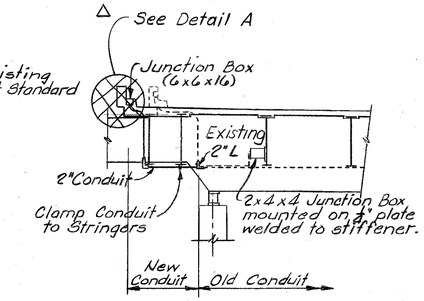


AT FLOORBEAM PIER 123E

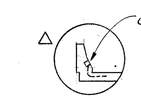


DETAIL A

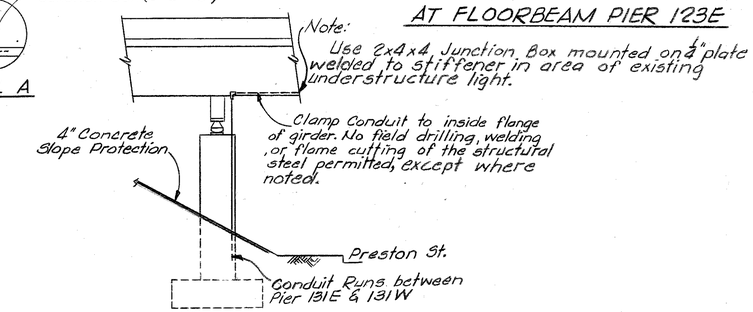


ELEVATION @ PIER 131E
Looking from North to South

TYPICAL CONDUIT FOR DECK & UNDERSTRUCTURE LIGHTING

## Notes

1. New 2" Conduit with 2 #8 wires.
2. New 6"H x 6"D x 16"L Junction Box in ~~Curb.~~ Barrier △
3. New Conduit is to be spliced to existing conduit at existing girder G and extended to new Junction Box in Curb. The existing wire in the deck slab is to be replaced with 2 new #8 wires from Junction Box to Light Standard. 53 △
4. Relocated Light Standard. See Sheet 28 for anchor bolt locations and concrete details for base anchorage.
5. Relocated under structure light.
6. 1¼"ϕ underground conduit between End Bent 101W and 101E to be replaced where destroyed by new footings. 2 new #8 wires to be installed between permitted splice points.

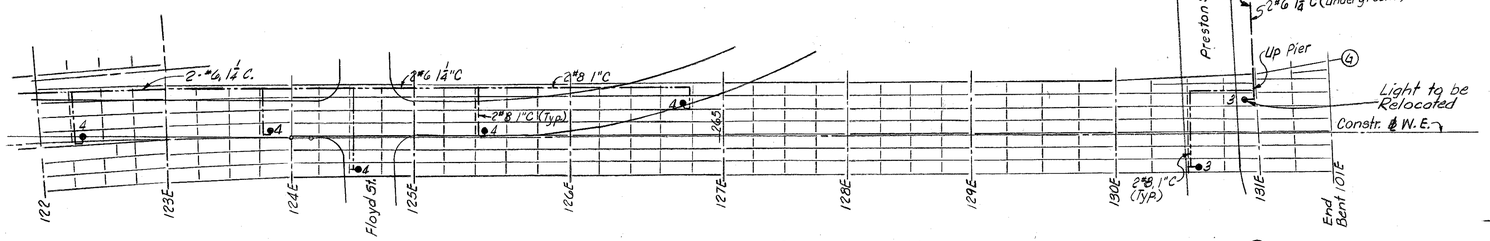


PLAN OF EXISTING UNDER STRUCTURE LIGHTING

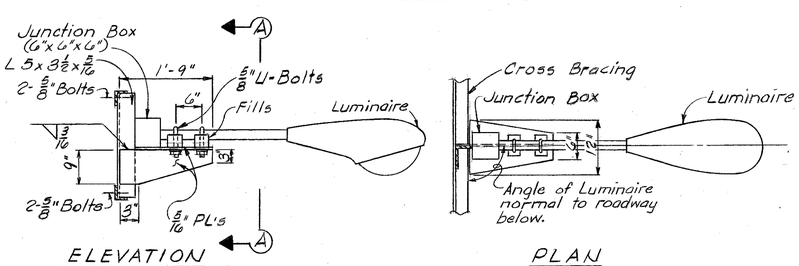


ELEVATION

PLAN

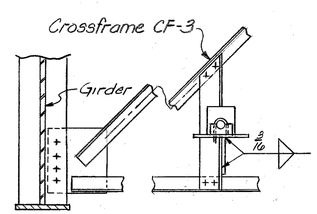


SECTION A-A

UNDER STRUCTURE LIGHTING BRACKET DETAILS

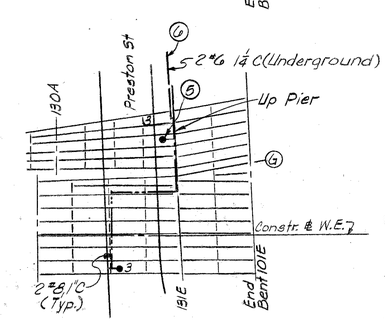


PLAN OF NEW UNDER STRUCTURE LIGHTING @ PRESTON ST.

## LEGEND

- Indicates Steel Light Standard with 4 ft. bracket mounted on bridge plinth (30'± mounting height) and 400 w. 20,000 Lumen Mercury Vapor Luminaire with built-in ballast. III indicates I.E.S. Type III distribution. Number (2) indicates circuit connected to luminaire.
- Indicates 250 w. 11,600 Lumen Fused Mercury Vapor Luminaire for Street & Wharf Lighting under structure. Number (3) indicates circuit connected to luminaire.
- Indicates Illuminated Overhead Sign. Number (2) indicates circuit for connection to sign transformer.
- ---- Indicates Conduit Run concealed in structure concrete.
- —— Indicates Conduit Run buried below ground.
- ----- Indicates Conduit Run exposed on structure.

SHEET 42

**COMMONWEALTH OF KENTUCKY**
BUREAU OF HIGHWAYS
FRANKFORT
COUNTY OF
**JEFFERSON**
LOUISVILLE-LEXINGTON
ROAD

STATION 267+00 | P. E. PROJECT NO. I64-2(92)

| CONSTRUCTION PROJECT NO. | MAINTENANCE PROJECT NO. | DRAWING NO. |
|---|---|---|
| | | 19238 |

BRIDGE LIGHTING

UPDATE DATE
LETTING DATE

DESIGNED BY F.H.C. | CHECKED BY R.L.K. | DATE 4-75
DETAILED BY R.H.M. | CHECKED BY R.L.K. | DATE 4-75
TRACED BY | CHECKED BY | DATE

△ Indicates Revision for G.N. Barrier — DATE 7/75
REVISED | DATE
REVISED | DATE
REVISED | DATE

UPDATE DATE
LETTING DATE

## DESCRIPTION OF EXISTING STRUCTURE LIGHTING

"400 W. Mercury Vapor Luminaires with mogul multiple socket for use with lamp listed below, to be arranged for IES Type III distribution and for 2" slip fitter mounting. To be GE Type M-400 with photometric curve #221H462, Westinghouse Type OV-25 with photometric curve #498598, or approved equal. Units to be provided with regulated output ballast to operate in 440 V. multiple circuit."
"Type H33-1-CD (ASA Designation) 400 W. clear, 21,500 lumen mercury vapor lamps."
"250 W. Mercury Vapor Luminaires with mogul multiple socket for use with lamps listed below. To be arranged for IES Type III or IV distribution and for 2" slip fitter mounting. To be GE Type 250 R with photometric curve similar to #221H616, Westinghouse OV-12 with photometric curve #498877, Line Material Unistyle 250 with photometric curve #E-365-37, or approved equal. Units to have built-in fuse and regulated output ballast to operate in 230 V. multiple circuit"
"Type H37-5KC/W 13,000 lumen, high output white mercury vapor lamps."

The above was copied from the design drawings for the original construction and is for information only.

## MATERIALS FOR DECK & UNDERSTRUCTURE LIGHTING

| QUANTITY | ITEM |
|---|---|
| 770 L.F. | 2" ϕ Conduit in Concrete Curb & understructure Ⓐ |
| 40 L.F. | 1½" ϕ Conduit underground and up columns Ⓐ |
| 90 L.F. | 1" ϕ Conduit in Concrete Deck & understructure Ⓐ |
| 7 Each | Junction boxes in curb for lighting standards, signs, and splices, 6" high x 6" wide x 16" long, flush mounting, inside flanged recessed cover, galvanized cast iron weatherproof box, OZ Electric Co. Type "YLJ", Spring City Electric Co. Type "IR", Hope Electric Co. Type H6-200, or approved equal. |
| 2 Each | Conduit expansion fittings suitable for expansion movement that will be encountered in installation. Crouse-Hinds Type XJ641 with GC100 Bonding Jumper, OZ Electric Co. Type EX200 with BJ 1520-24 Bonding Jumper, Spring City Electric Co. Type EF200 with EJ200 Bonding Jumper, or approved equal. |
| 2 Each | Junction boxes under bridge for splices, 2" high x 4" wide x 4" long, surface mounted galvanized cast iron weatherproof box, OZ Electric Co. Type "YS," Spring City Type "S" or approved equal. |
| 1,620 L.F. | 1-Conductor #8 wire Ⓐ |
| 300 L.F. | 1-Conductor #6 wire Ⓐ |

Ⓐ As described in Special Provision № 82, current edition.

## UNITS TO BE RELOCATED

| | |
|---|---|
| 3 | Deck Light Standard & Luminaires |
| 1 | Under Structure Light, Bracket, & Luminaire |

The estimated quantities shown above are for the Bureau of Highways use only. The Contractor is to determine the actual quantities for his own purposes. No payment will be made for any over run.

Any Light Standards, Luminaires, or their components, damaged during relocation shall be replaced at the Contractors expense.

Any Existing wire removed from conduit (and replaced with new wire) shall become the property of the Contractor.

## MEASUREMENT AND PAYMENT

Expressway and understructure lighting will be measured as a unit and paid for at the contract lump sum price bid for Lighting. The lump sum bid shall be full compensation for relocation of existing lighting standards, luminaires, mounts, etc., furnishing all material and equipment, transportation, installation, paint and painting, tools and incidentals necessary to complete the lighting work. This method of payment supersedes Paragraph V, Special Provision № 82, current edition.

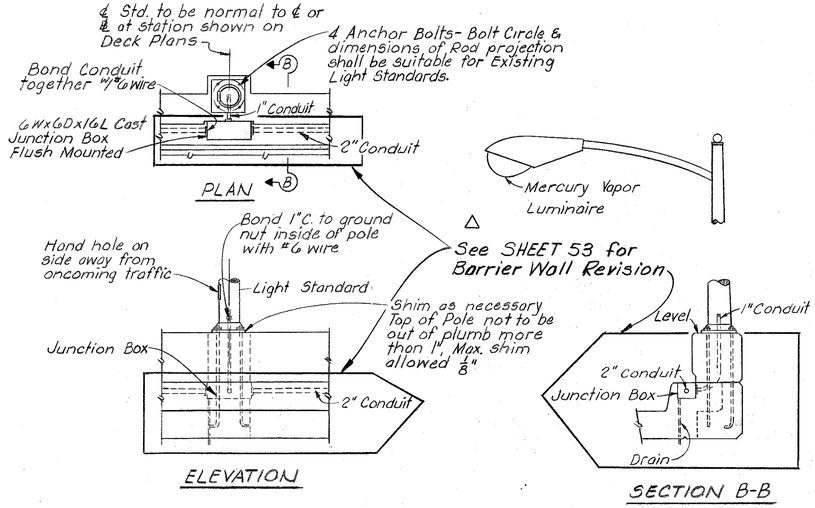


TYPICAL LIGHT STANDARD MOUNTING

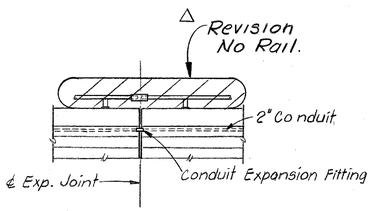


TYPICAL DETAIL OF EXPANSION FITTING AT EXPANSION JOINT

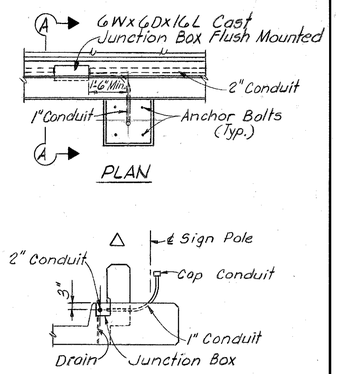


SECTION A-A

JUNCTION BOX & CONDUIT DETAIL AT SIGN SUPPORT

△ South Fascia shown, see SHEET 53 for North Fascia Details

## CONSTRUCTION NOTES FOR DECK & UNDERSTRUCTURE LIGHTING

See Kentucky Bureau of Highways Special Provision № 82, current edition for Roadway Lighting System. These Special Provisions shall apply to the relocation of existing lighting standards, luminaires, mounts, etc., as well as the new work called for in the plans.
The Contractor is responsible for coordinating the existing light standard base anchor bolt dimensions with the supports in the new construction.

Where an incoming and outgoing circuit exist in a pole base, the feed circuit must be permanently identified as "FEED".

All wiring shall be in conduit. All conduit for Expressway lighting shall be 2" ϕ unless otherwise noted.

Luminaires shall be connected to circuit wires in lighting standard junction boxes with fused Y cable connectors. Provide Y cable connectors in circuit wires in sign junction box for connection of sign wiring.

Main circuit wiring shall be 1-conductor #8. Branch circuit wiring between lighting standard junction boxes and luminaires is 2-conductor #12. (For roadway lighting)

The wire size and type shall be the same as the size and type that it replaces.

Branch tops for individual luminaires shall be 2-#8 wires in 1" Conduit.

△ Indicates Revision For G.M. Barrier

| | | | |
|---|---|---|---|
| DESIGNED BY: RHC | CHECKED BY: RWK | DATE 4-75 | REVISED: DATE 7/75 |
| DETAILED BY: RHMC | CHECKED BY: RHC | DATE 4-75 | REVISED: DATE |
| TRACED BY: | CHECKED BY: | DATE | REVISED: DATE |

SHEET 43

**COMMONWEALTH OF KENTUCKY**
BUREAU OF HIGHWAYS
FRANKFORT
COUNTY OF
**JEFFERSON**
LOUISVILLE-LEXINGTON
ROAD

STATION 267+00 | P. E. PROJECT NO. I64-2(92)

| CONSTRUCTION PROJECT NO. | MAINTENANCE PROJECT NO. | DRAWING NO. |
|---|---|---|
| | | 19238 |

BRIDGE LIGHTING

UPDATE DATE
LETTING DATE

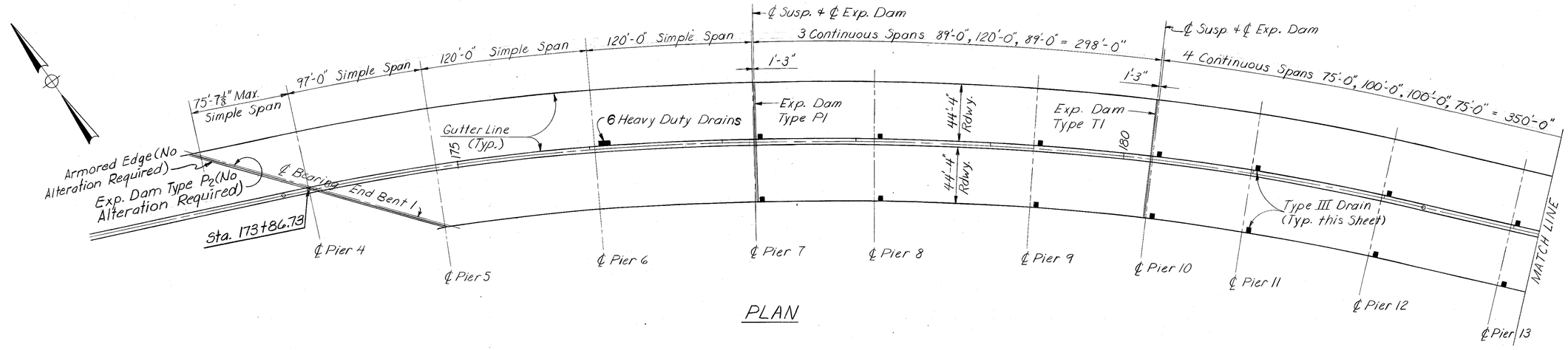


PLAN

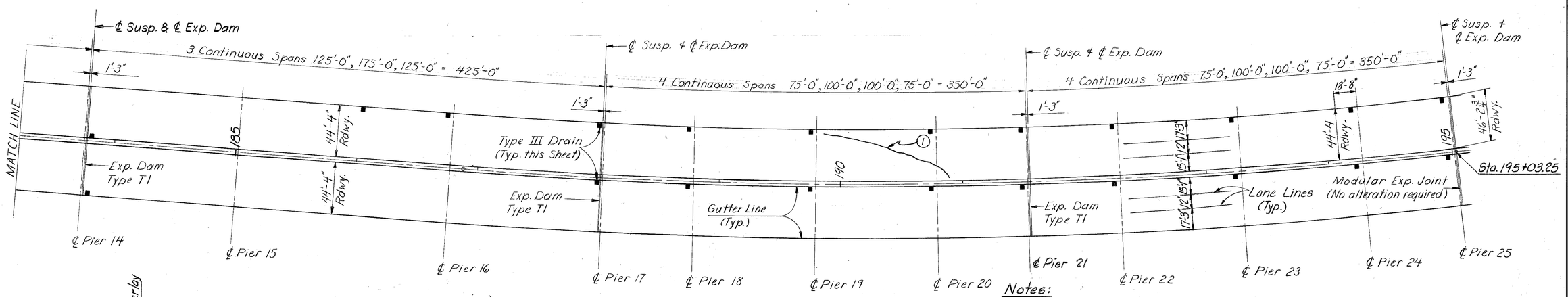


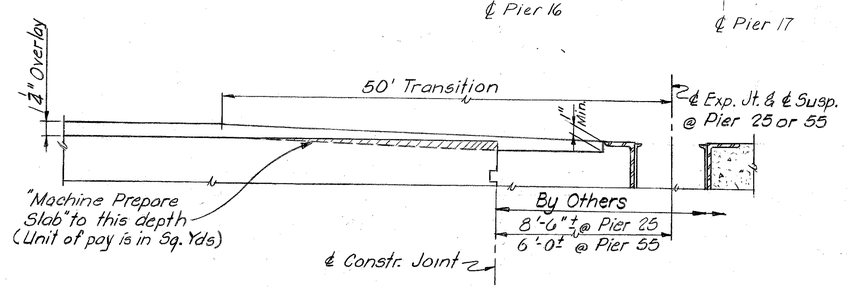


DECK OVERLAY TRANSITION AT PIERS 25 AND 55

**Notes:**

For Expansion Dam Alterations see Sht. 48

For Drain Alterations see Sht. 49

For Deck Overlay transition @ End Bent 1 see Sht. 44

(1) Deck Patches-All patches with visible cracks or no bond between the concrete Deck and the patch shall be removed in accordane with the "Special Notes for Deck Overlay" (The basis of payment is "Machine Prepare Slab", measured in Sq. Yds).

DECK OVERLAY - 17TH - 13TH STREETS

SHEET NO 45

**COMMONWEALTH OF KENTUCKY**
BUREAU OF HIGHWAYS
FRANKFORT
COUNTY OF
**JEFFERSON**
**LOUISVILLE-LEXINGTON**
ROAD

STATION 267+00 | P. E. PROJECT NO. 164-2(92)

| CONSTRUCTION PROJECT NO. | MAINTENANCE PROJECT NO. | DRAWING NO. |
|---|---|---|
| | | 19238 |

DESIGNED BY
DETAILED BY R.H. Mc.
TRACED BY KPW
CHECKED BY
CHECKED BY RHC & Black DATE 4-75
CHECKED BY
REVISED
REVISED
REVISED

UPDATE DATE
LETTING DATE

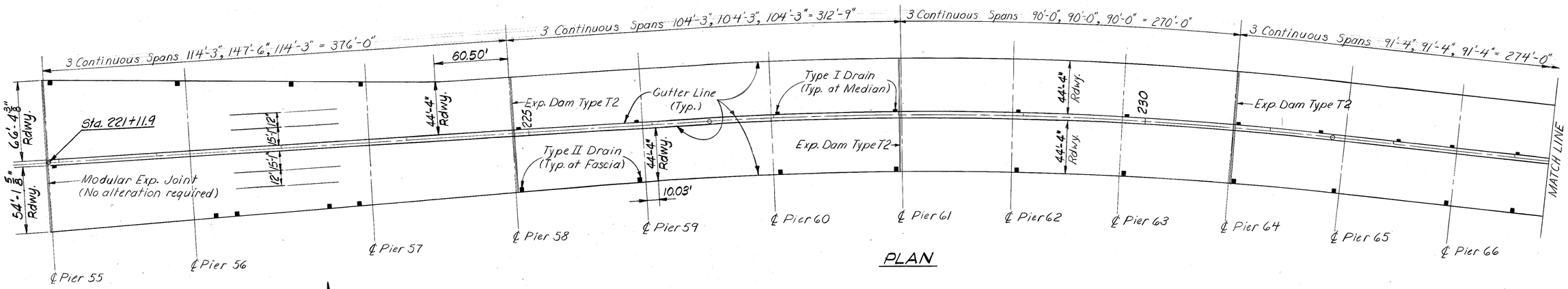


PLAN

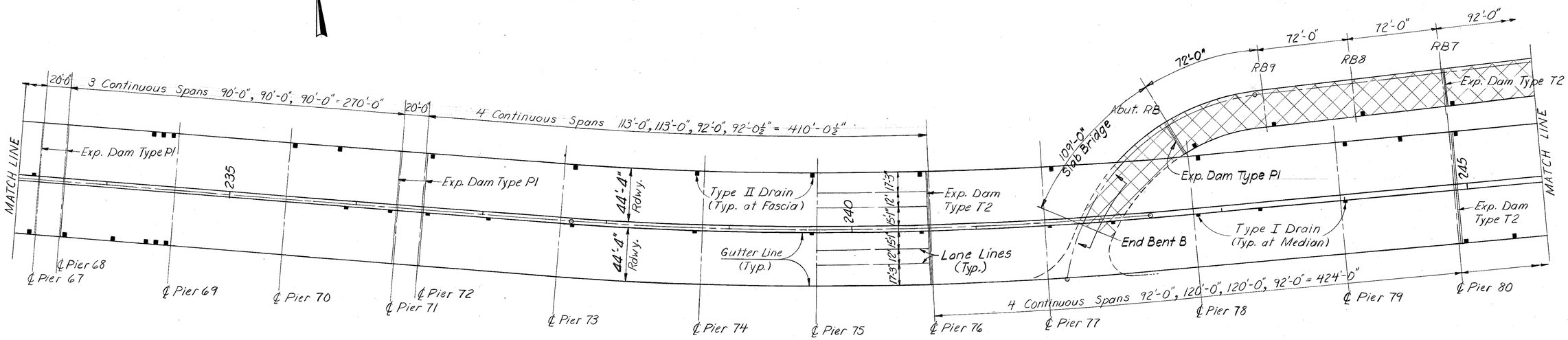


PLAN

Not a part of this contract.
No surface treatment.

NOTE:

For Drain Alterations See Sht. 49

For Expansion Dam Alterations See Sht. 48

For Deck Overlay transition @ Pier 55 see Sht. 45

SHEET NO 46

**COMMONWEALTH OF KENTUCKY**
BUREAU OF HIGHWAYS
FRANKFORT
COUNTY OF
JEFFERSON
LOUISVILLE-LEXINGTON
ROAD

STATION 267+00 | P. E. PROJECT NO. I64-2(92)

| CONSTRUCTION PROJECT NO. | MAINTENANCE PROJECT NO. | DRAWING NO. |
|---|---|---|
| | | 19238 |

DECK OVERLAY-7TH-2ND ST.

DESIGNED BY RHL DATE
DETAILED BY RHL DATE 4-72 REVISED
TRACED BY CHU CHECKED BY RHL & Black DATE 4-72 REVISED
CHECKED BY DATE REVISED

UPDATE DATE
LETTING DATE

The Contractor shall remove the Energy Absorption Crash Barrier and apply the Deck Overlay. The Deck Overlay shall cover the entire area under the Barrier with a 6" minimum projection outside the Barrier edge. The contractor is responsible for replacing the Barrier in its original condition. The cost is to be incidental to the Deck Overlay

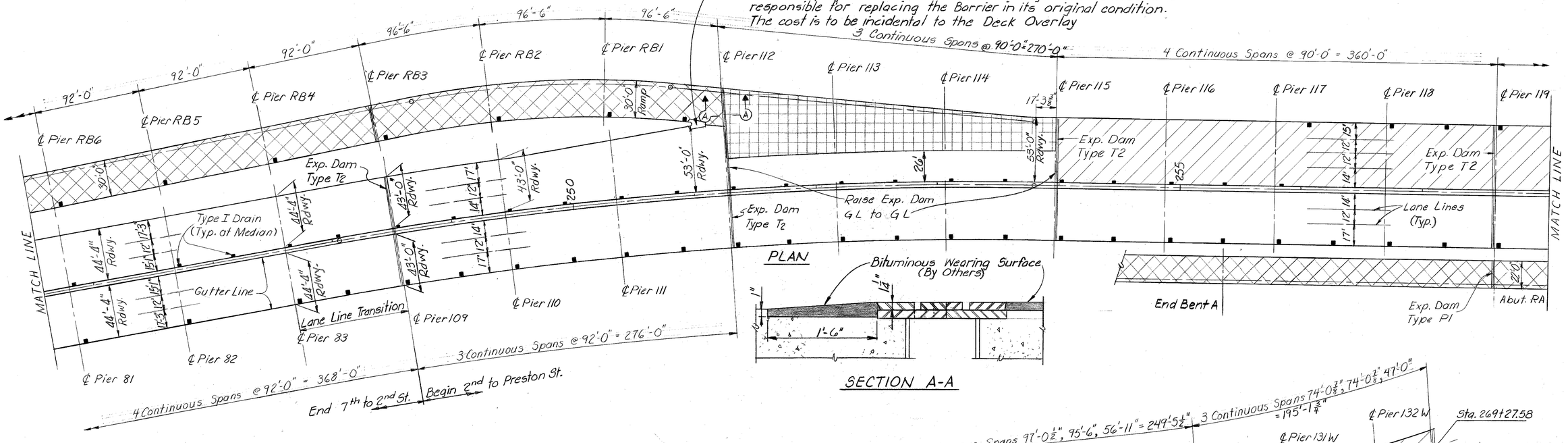


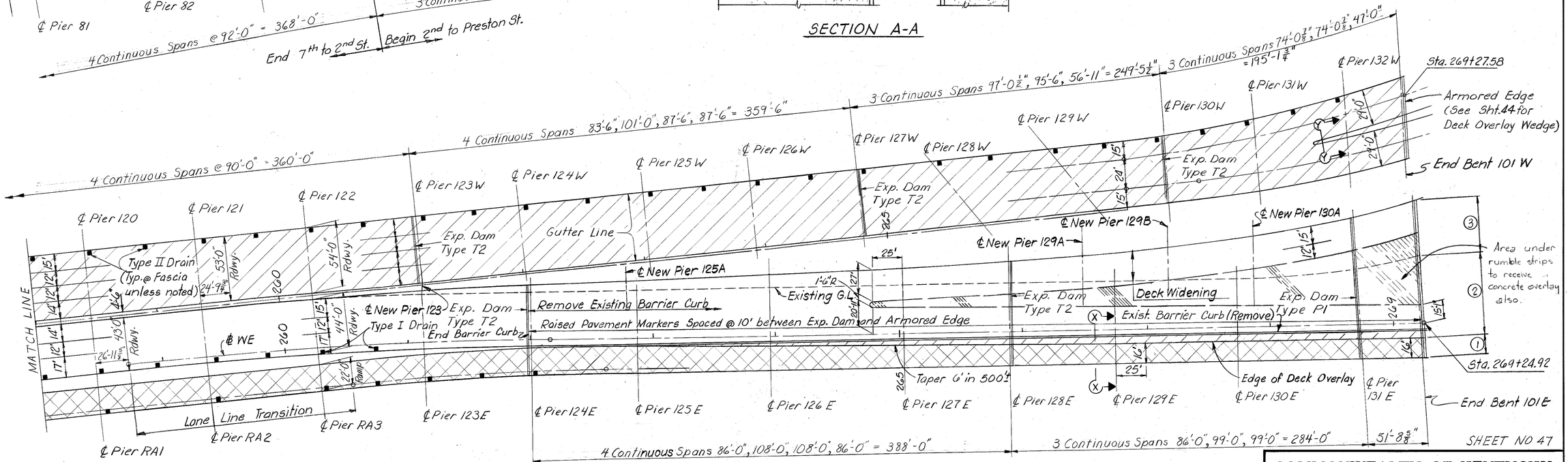


Note:
All areas to receive Deck Overlay are to be sand blasted. The overlay shall be applied within 36 hours of sand blasting.

Not a part of this Contract. No surface treatment.

Area previously open to traffic to be Machine Prepared to ¼" depth and to receive 1½" min. Deck Overlay.

Indicates Rumble Strips- See Special Notes and Sht. 49 for Details.

Area to receive bituminous wearing surface. (by others)

Notes:
For Drain Alterations see Sht. 49
① No alterations required on existing Armored Edges.
② For Armored Edge Alterations see Sht. 49
③ No alterations required on new Armored Edges.
For Sections X-X & Y-Y see Sht. 48

DECK OVERLAY 2ND-PRESTON

**COMMONWEALTH OF KENTUCKY**
BUREAU OF HIGHWAYS
FRANKFORT
COUNTY OF
**JEFFERSON**
LOUISVILLE-LEXINGTON
ROAD
STATION 267+00 P.E. PROJECT NO. 164-2(92)

| CONSTRUCTION PROJECT NO. | MAINTENANCE PROJECT NO. | DRAWING NO. |
|---|---|---|
| | | 19238 |

SHEET NO 47

DESIGNED BY RHM CHECKED BY FBL & Black DATE 4-25 REVISED
DETAILED BY RHM CHECKED BY DATE REVISED
TRACED BY KMU CHECKED BY DATE REVISED

UPDATE DATE
LETTING DATE

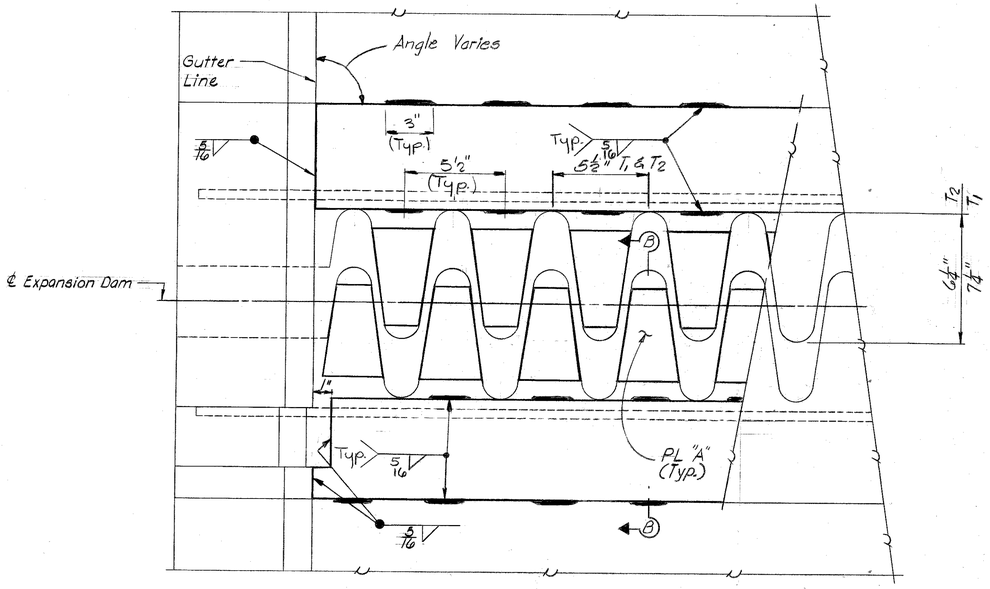


PLAN
EXPANSION DAM TYPES T1 & T2

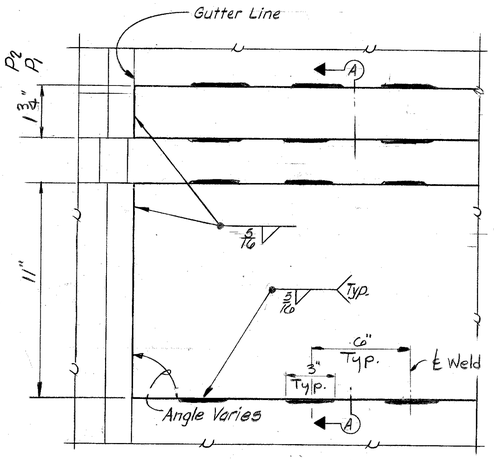


PLAN
EXPANSION DAM TYPE P1 & P2

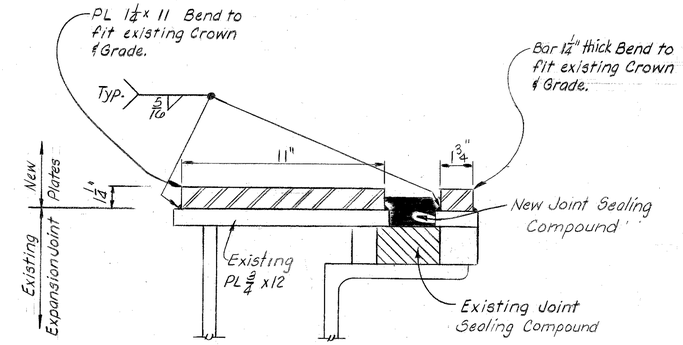


SECTION A-A

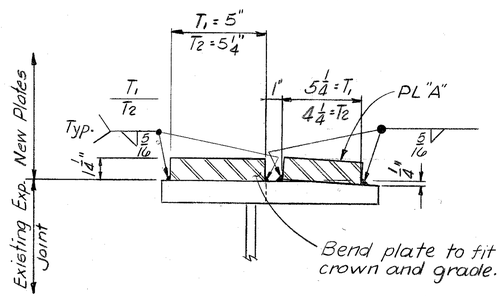


SECTION B-B
(Plates opposite side similar)

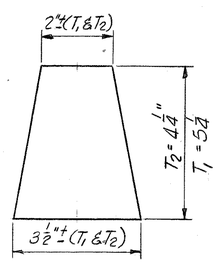


DETAIL OF PLATE "A"

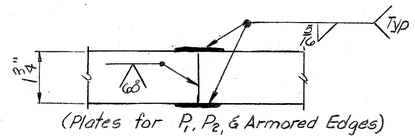


(Plates for P1, P2, & Armored Edges)

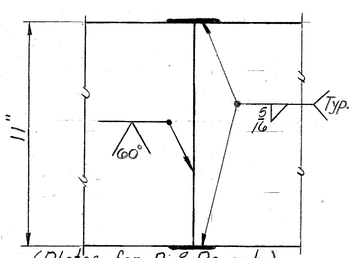


(Plates for P1 & P2 only)

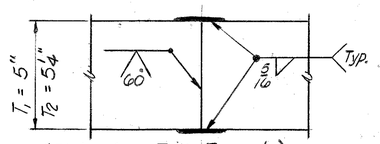


(Plate for T1 & T2 only)

OPTIONAL PLATE SPLICE DETAILS

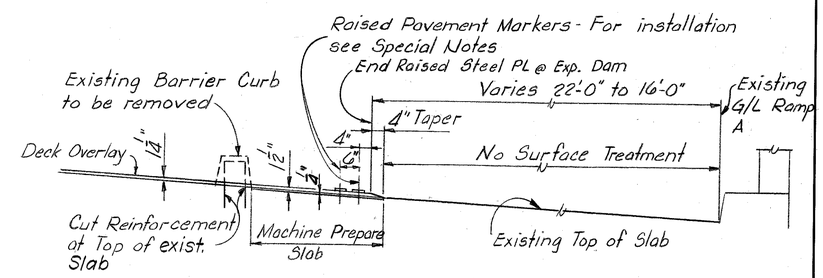


SECTION X-X

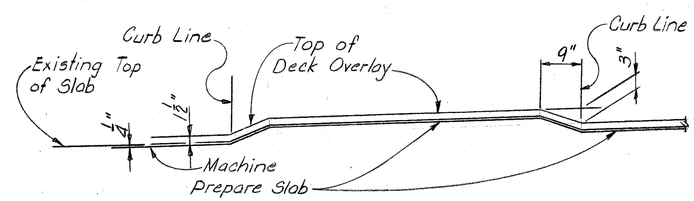


SECTION Y-Y

Note:

All Expansion Dam and Armored Edge Steel shall be A242 unless noted.

The expansion dam dimensions are taken from the bridge design drawings. The Contractor shall obtain the plate length and verify the plate width and tooth dimensions by field measurement.

DESIGNED BY RJHC CHECKED BY DATE
DETAILED BY RJHC CHECKED BY RHBlack DATE 11-15 REVISED
TRACED BY CHECKED BY DATE REVISED

SHEET NO 48

**COMMONWEALTH OF KENTUCKY**
BUREAU OF HIGHWAYS
FRANKFORT
COUNTY OF
JEFFERSON
LOUISVILLE - LEXINGTON
ROAD
STATION 267+00 P. E. PROJECT NO. 164-2(92)

| CONSTRUCTION PROJECT NO. | MAINTENANCE PROJECT NO. | DRAWING NO. |
|---|---|---|
| | | 19238 |

DECK OVERLAY - DETAILS

UPDATE DATE
LETTING DATE

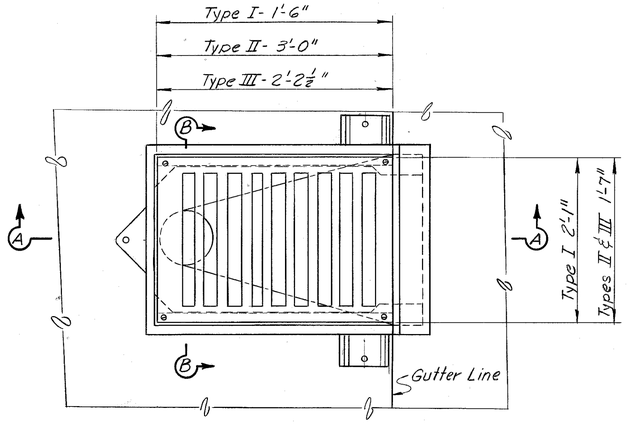


PLAN
DECK DRAIN MODIFICATIONS

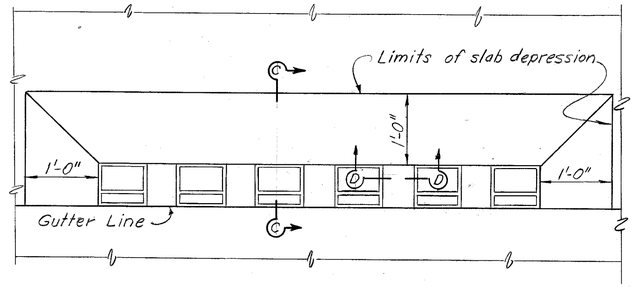


PLAN
HEAVY DUTY DRAIN AT PIER 6
(17TH - 13TH Street)

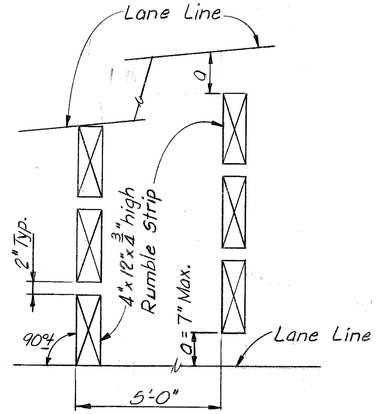


TYPICAL LAYOUT OF RUMBLE STRIPS
(See Sheet 47 for location)

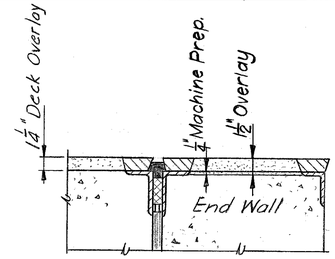


For details not shown see "Section @ Armored Edge", Sheet. 45

DECK OVERLAY AT END BENT 10 & E
Existing Section
(For details not shown see Section thru Armored Edge, Sheet 44)

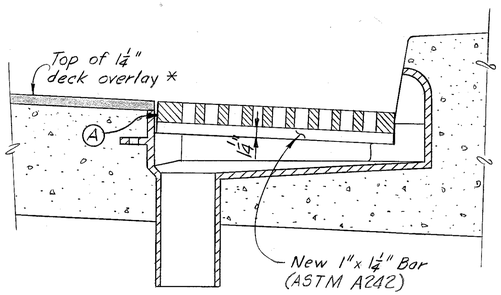


SECTION A-A

*Care shall be taken to maintain thickness of overlay adjacent to drains so as to reproduce depression in top of existing slab.

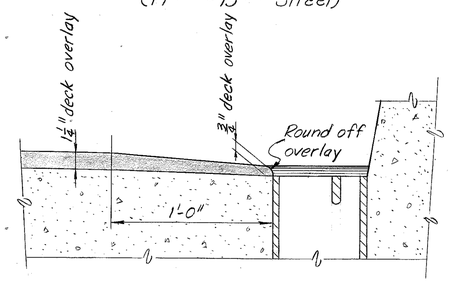


SECTION C-C

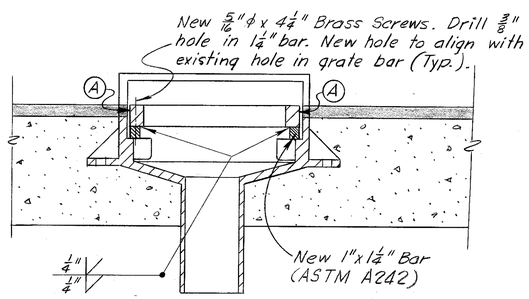


SECTION B-B

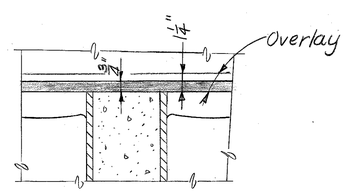


SECTION D-D

Note (A)
Coat surface of drain grates, which will be in contact with overlay material, with hot wax or tallow. No direct payment will be for this item but it shall be incidental to Deck Overlay.

DESIGNED BY ____ CHECKED BY ____ DATE ____ REVISED ____
DETAILED BY RHHC CHECKED BY RHHC DATE 4-15 REVISED ____
TRACED BY ____ CHECKED BY ____ DATE ____ REVISED ____

SHEET NO. 49

**COMMONWEALTH OF KENTUCKY**
BUREAU OF HIGHWAYS
FRANKFORT
COUNTY OF
JEFFERSON
LOUISVILLE-LEXINGTON
ROAD
STATION 267+00 P. E. PROJECT NO. 164-2(92)

| CONSTRUCTION PROJECT NO. | MAINTENANCE PROJECT NO. | DRAWING NO. |
|---|---|---|
| | | 19238 |

DECK OVERLAY - DETAILS

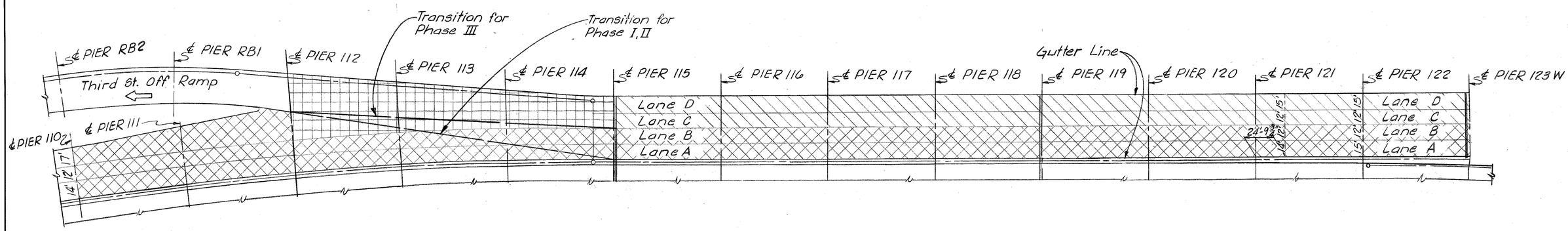


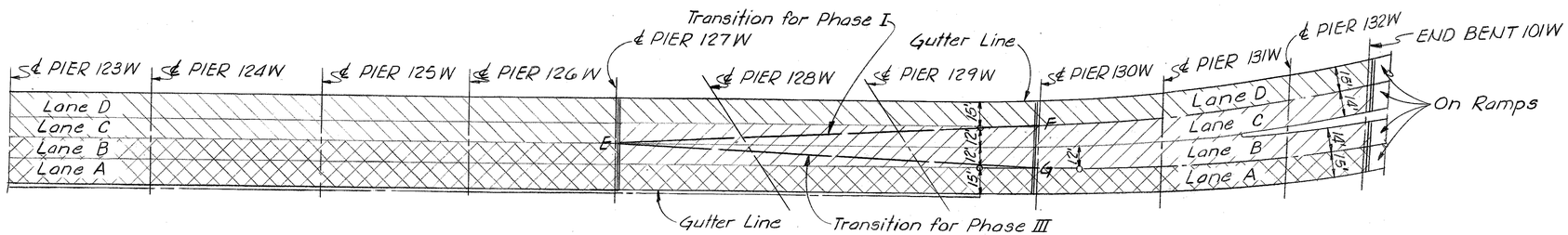


## PLAN OF DECK OVERLAY
(PIER 110 to END BENT 101W)

### LEGEND

- Phase I
- Phase II
- Phase III
- Bituminous Overlay (By others)

## CONSTRUCTION SEQUENCE

### PHASE I OVERLAY

1a. Close all of Lane D from Pier 115 to beyond the structure on the ramp.
1b. Close Lane B on the ramp east of the structure.
1c. Transition Lane C traffic to Lane B by placing barricades along line EF from Pier 127W to Pier 130W.
1d. Close Lane C from Pier 115 to Pier 127W.
1e. Barricade from the gore of the Third St. Off Ramp to the left pavement edge at Pier 115. (Traffic at this point is using Lanes A and B from Pier 115 to Pier 127W).
1f. Surface all of Lane D and surface Lane C from Pier 115 to Pier 127W. (This is the portion shown thus ▨).

### PHASE II OVERLAY

2a. Open Lane D throughout and close Lane C from Pier 115 to east of the structure on the ramp.
2b. Close Lane B from Pier 115 to the east of the structure.
2c. Barricade between Lanes C and D and between Lanes A and B from Pier 115 to east of the structure on the ramps. Traffic is maintained at this point in Lanes A and D.
2d. Surface Lanes B and C from Pier 127W east to end of structure. (This is the portion shown thus ▨).

### PHASE III OVERLAY

3a. Close Lane C on ramp east of the structure.
3b. Close Lane A from beginning of project to east of the structure on ramp.
3c. Transition Lane B traffic to Lane C by placing barricades along line EG from Pier 127W to Pier 130W
3d. Close Lane B from beginning of Project to Pier 127W
3e. Barricade from gore of Third St. Off Ramp to center of Pier 115 between Lane B and C. (Traffic using Lanes C and D from Third St. Ramp to Pier 127W).
3f. Surface all of Lane A and surface Lane B from beginning of project to Pier 127W. (This is the portion shown thus ▨).

Signing and placement of barrels, barricades, etc., for lane closures on the ramp beyond the structure should conform as nearly as possible to standard drawing TSC-210. Due to the length available, modifications of spacing will be necessary and should, if possible, conform to the spacing shown for 35 and 40 MPH. Portable flashing arrows shall be used.

OVERLAY CONSTRUCTION SEQUENCE

SHEET 50

**COMMONWEALTH OF KENTUCKY**
BUREAU OF HIGHWAYS
FRANKFORT
COUNTY OF
JEFFERSON
LOUISVILLE-LEXINGTON
ROAD

STATION 267+00 | P. E. PROJECT NO. 164-2(92)

| CONSTRUCTION PROJECT NO. | MAINTENANCE PROJECT NO. | DRAWING NO. |
|---|---|---|
| | | 19238 |

UPDATE DATE
LETTING DATE

DESIGNED BY RHMC | CHECKED BY | DATE 4-75 | REVISED
DETAILED BY | CHECKED BY | DATE | REVISED
TRACED BY | CHECKED BY | DATE | REVISED

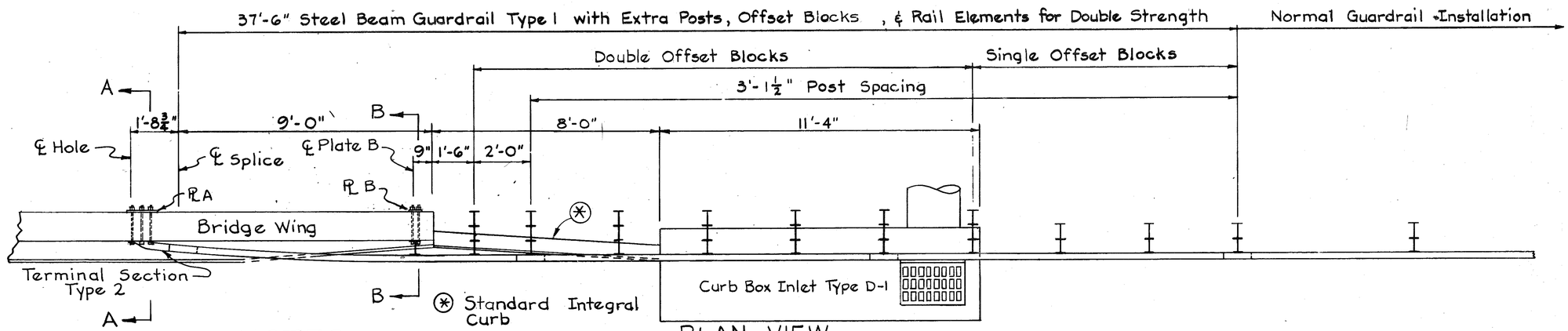


PLAN VIEW

## NOTES

1. GENERAL
   a. Guardrail Connector to Bridge End Type A-2 shall be utilized on the following projects where the design of the bridges has been completed prior to the effective date of this drawing : (1) Grade and Drain , (2) Grade, Drain, and Surfacing :
   b. See current Standard Drawings in the RBB, RBI, RBR , and RPM series for other related details .
   c. See sheet _____ of _____ of these plans for Curb Box Inlet Type D-1 .
2. MATERIAL REQUIREMENTS
   a. All hardware shall be galvanized . (ASTM A153)
   b. (1) ¼" Steel Plate A . (ASTM A36)
   c. (1) ¼" Steel Plate B . (ASTM A36)
   d. (6) ⅞" Hex Head Bolts (Length As Shown). (ASTM A325)
   e. (6) ⅞" Heavy Hex Nuts (⅞" Thick). (ASTM A325)
   f. (8) ⅞" Flat Washers (3/16" Thick). (ASTM A325)
   g. (4) ⅞" Beveled Washers (5/16" Mean Thickness). (ASTM A325, AASHO 2.10.3)
3. CONSTRUCTION METHODS
   a. Back-up Plates are required at all posts except at splices.
   b. See Bridge Plans for Bridge Wing details .
4. METHOD OF MEASUREMENT AND BASIS OF PAYMENT
   a. Guardrail Connector to Bridge End Type A-2 shall be paid for at the contract unit price each, and includes : Terminal Section Type 2 ; all items which are in addition to the normal installation of Steel Beam Guardrail Type I (Extra Posts, Offset Blocks , Rail Elements., Hardware , Etc.) ; and all other incidentals necessary to complete the installation as detailed .
   b. Steel Beam Guardrail Type I is a separate bid item and is always required. The Integral Curb and Curb Box Inlet Type D-1 are separate bid items that shall be used when required for Bridge End Drainage .
   c. The Plastic Pipe and cost of forming shall be included in the unit price bid for bridge superstructure concrete.

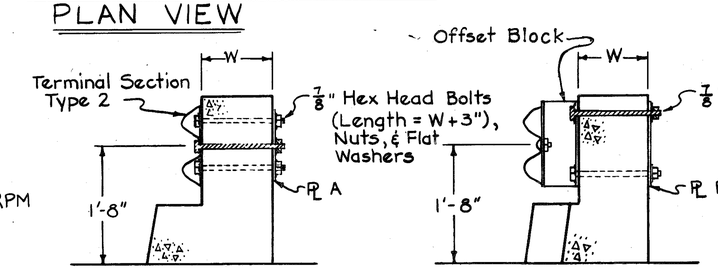


SECTION A-A  SECTION B-B

BRIDGES WITH 9" OR LESS BRUSH BLOCK WIDTH

Note : Form 1" Holes through Bridge Wings perpendicular to traffic side of wing with 1" I. D. Plastic Pipe, which shall remain in place after fabrication.

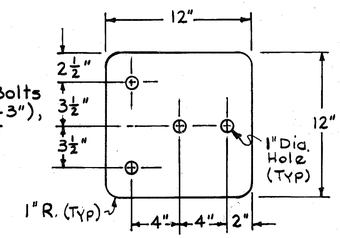


¼" STEEL PLATE A

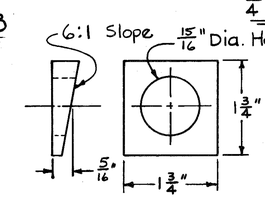


BEVELED WASHER

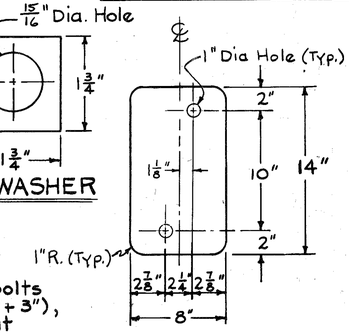


¼" STEEL PLATE B

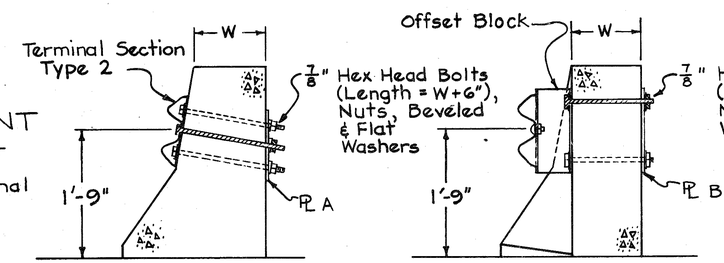


- SECTION A-A -  SECTION B-B -

BRIDGES WITH G.M. TYPE BARRIER CURB

FOR INFORMATION ONLY

Drawing No. 19238  Sheet 51

KENTUCKY BUREAU OF HIGHWAYS

GUARDRAIL CONNECTOR TO BRIDGE END TYPE A-2

STANDARD DRAWING No.

SUBMITTED E.B. Drake Asst. 7/16/74
DIRECTOR DIVISION OF DESIGN  DATE

APPROVED _____
STATE HIGHWAY ENGINEER  DATE

DRAWN WTH  DATE 6-21-74
CHECKED S.L.A. & S.C.M.  6-25-74
RECOMMENDED _____

UPDATE DATE
LETTING DATE

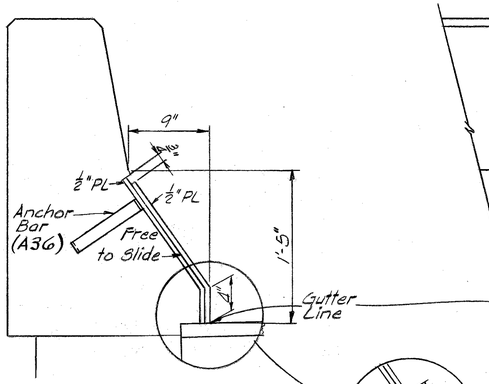


DETAIL A
(For Piers, 124E, 128E, & 131E)

For Pier 131E only

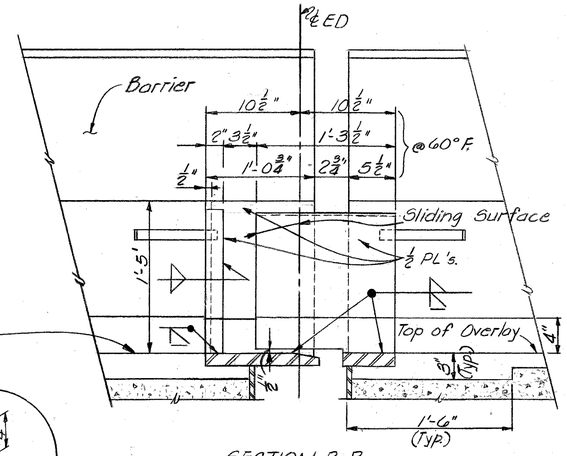


SECTION B-B
(Pier 124E Shown, Pier 128E is opposite hand)

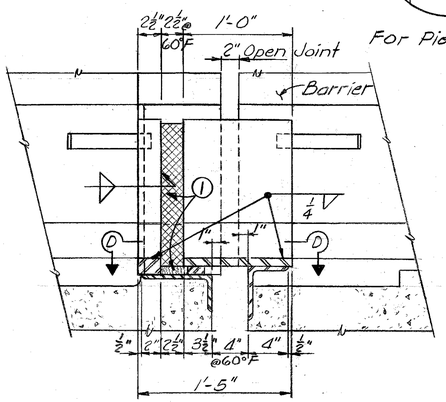


SECTION C-C
(Pier 131E)

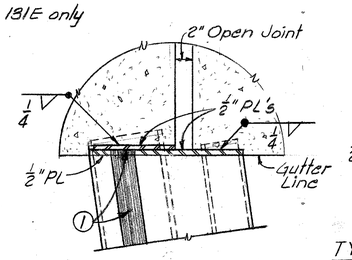


SECTION D-D

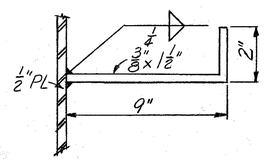


TYPICAL ANCHOR BAR DETAIL

NOTES
① Joint Sealing Compound. See Special Provision No. 12.
All steel A242 unless noted.

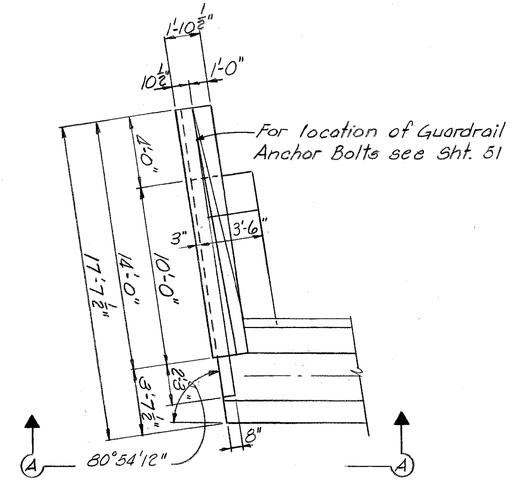


CAP PLAN

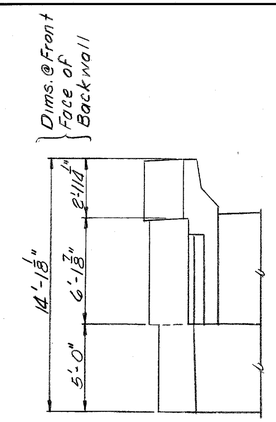


ELEVATION A-A

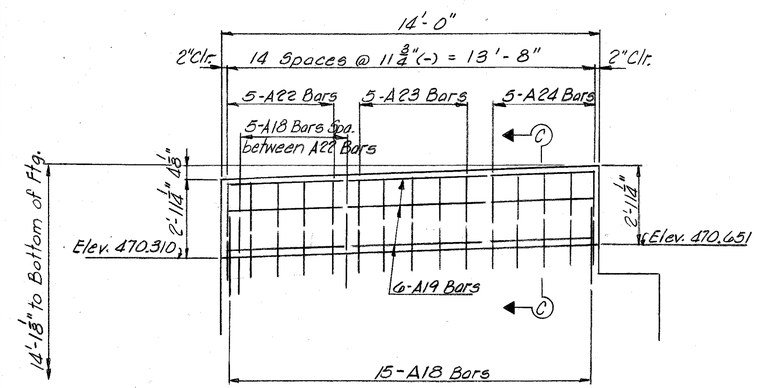


WINGWALL ELEVATION

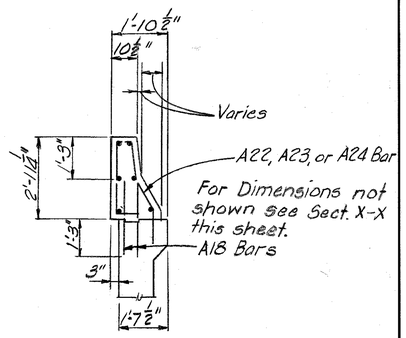


SECTION C-C

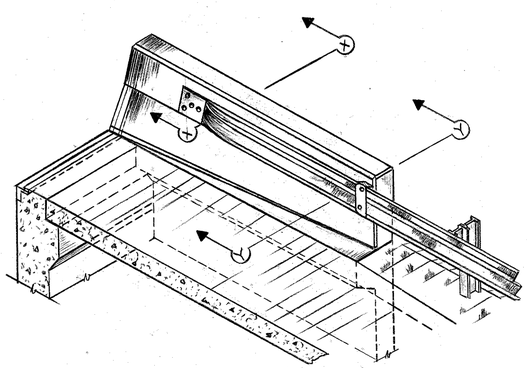

WINGWALL TAPER DETAIL

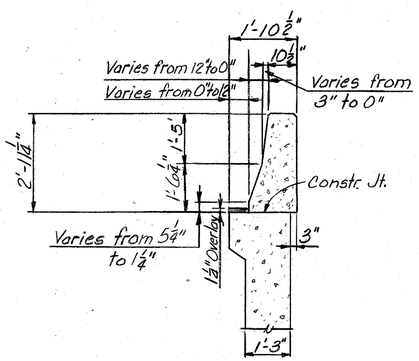


SECTION X-X

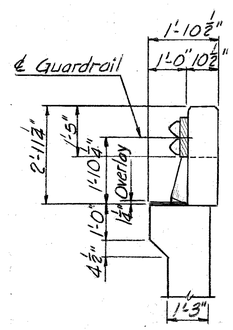


VIEW Y-Y

△ REVISED WINGWALL AND EXPANSION DAM DETAILS

SHEET 52

**COMMONWEALTH OF KENTUCKY**
BUREAU OF HIGHWAYS
FRANKFORT
COUNTY OF
**JEFFERSON**
LOUISVILLE-LEXINGTON
ROAD

STATION 267 + 00 | P. E. PROJECT NO. 164-2(92)

| CONSTRUCTION PROJECT NO. | MAINTENANCE PROJECT NO. | DRAWING NO. |
|---|---|---|
| | | 19238 |

△ Indicates Revision for GM Barrier

| | | | |
|---|---|---|---|
| DESIGNED BY RHWC | CHECKED BY | DATE | REVISED |
| DETAILED BY | CHECKED BY | DATE | REVISED |
| TRACED BY | CHECKED BY | DATE | REVISED |

DATE 7/75

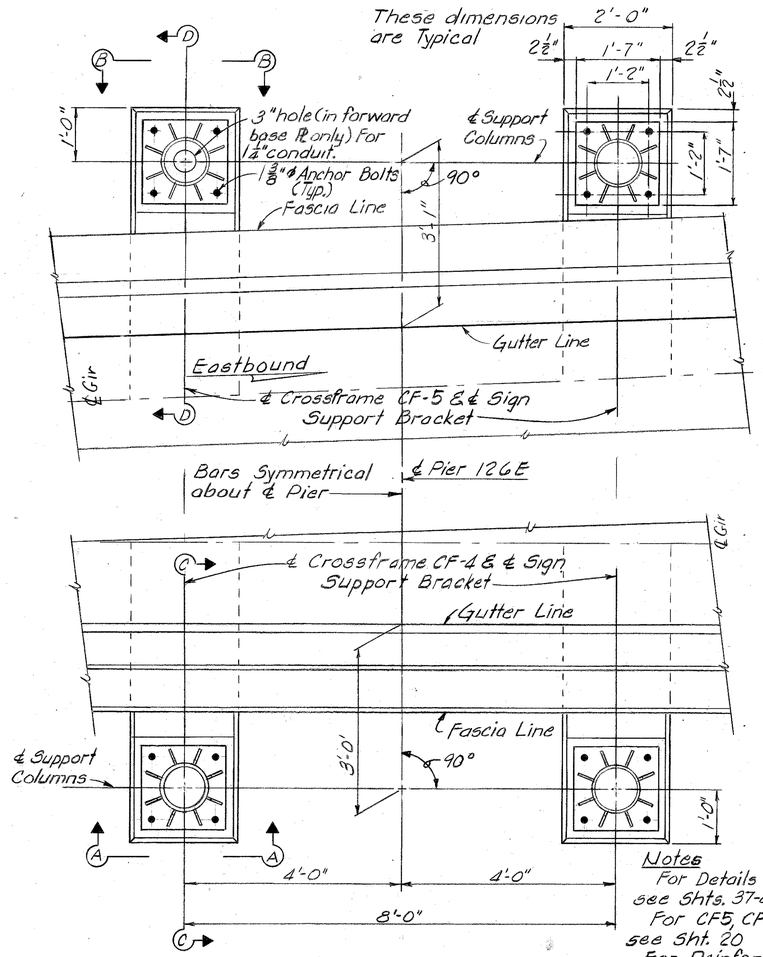


Notes
For Details of Overhead Sign Support see Shts. 37-40
For CF5, CF4,6 Sign Support Brackets see Sht. 20
For Reinforcing Bar Details see Sht. 30

PLAN OF SIGN SUPPORT BASE

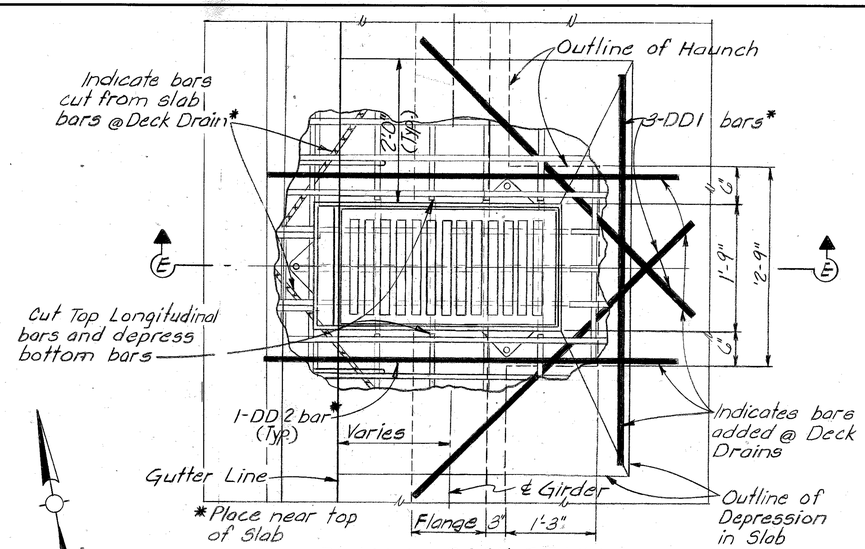


PLAN OF DECK DRAIN
For Location see Sht. 26

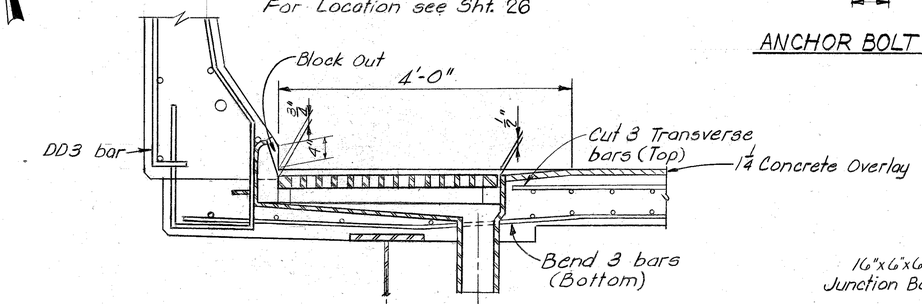


SECTION E-E

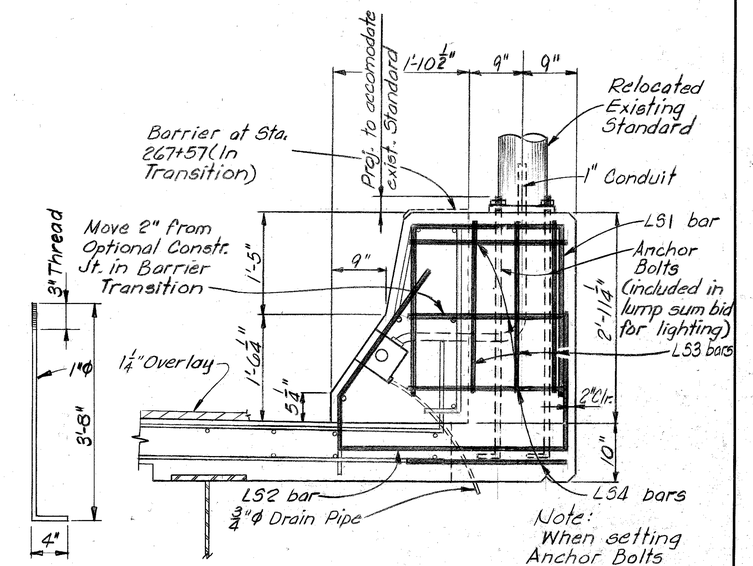


ANCHOR BOLT DETAIL

Note:
When setting Anchor Bolts contractor shall match spacing of holes in exist. poles.

SECTION F-F

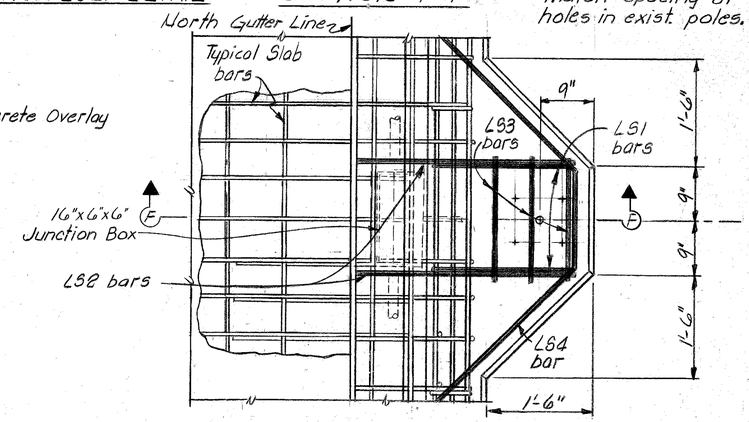


PLAN OF LIGHT STANDARD BASE
For Reinforcing Bar Details see Sht. 54
For Location see Shts. 25 & 26.

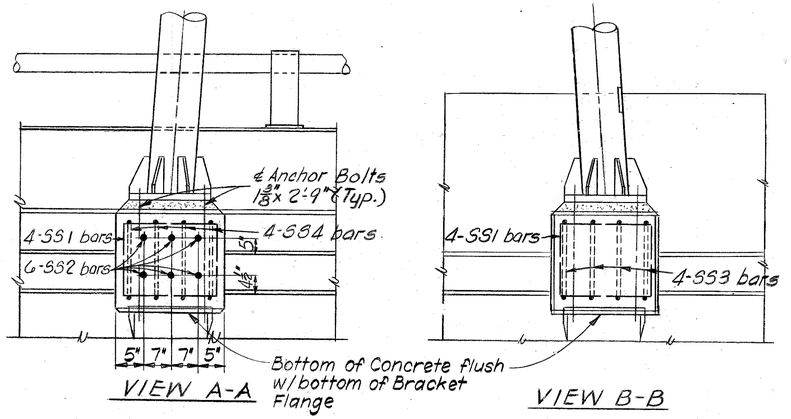


VIEW A-A

VIEW B-B

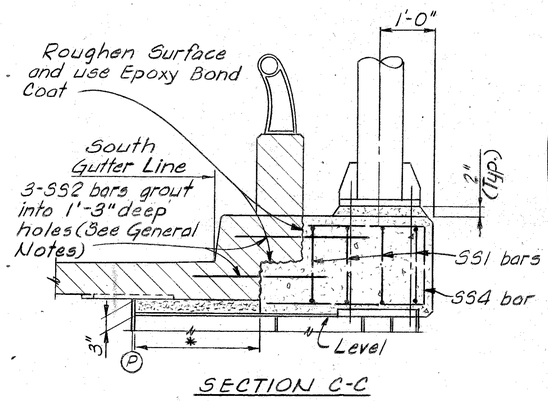


SECTION C-C

* Fill area between top flange of bracket and bottom of slab w/expansive grout.

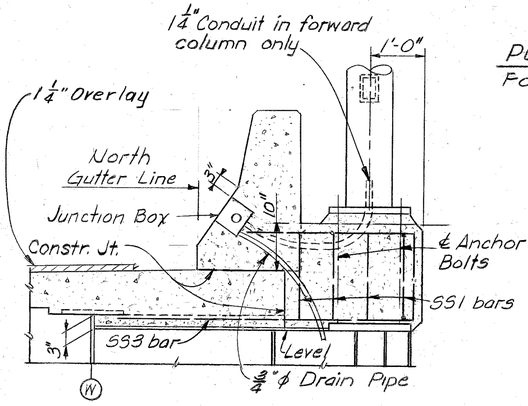


SECTION D-D

DECK-MISC. DETAILS △

SHEET 53

COMMONWEALTH OF KENTUCKY
BUREAU OF HIGHWAYS
FRANKFORT
COUNTY OF
JEFFERSON
LOUISVILLE-LEXINGTON
ROAD
STATION 267+00 P. E. PROJECT NO. 164-2(92)

| CONSTRUCTION PROJECT NO. | MAINTENANCE PROJECT NO. | DRAWING NO. |
|---|---|---|
| | | 19238 |

LETTING DATE

△ Indicates Revision for G.M. Barrier

| | | | |
|---|---|---|---|
| DESIGNED BY RHMc | CHECKED BY PME | DATE 4-1-75 | REVISED DATE 7-75 |
| DETAILED BY | CHECKED BY | DATE | REVISED DATE |
| TRACED BY | CHECKED BY | DATE | REVISED DATE |

## (84 ② -56 ③) SLAB

| MARK | TYPE | SIZE | NO. OF BARS IN SPAN EAST OF PIER 122 | 123 | 124 | 125A | 126 | 127 | 128 | 129A | 129B | 130A | 131 | LENGTH ft. | in. | a ft. | in. | LOCATION |
|---|---|---|---|---|---|---|---|---|---|---|---|---|---|---|---|---|---|---|
| S1 | ② | 5 | 56 | 80 | 72 | 109 | 101 | 80 | 56 | 65 | 63 | 72 | 47 | 10 | 0 | - | - | Barrier Tie |
| S2 | ⑤ | 5 | 24 | - | - | - | - | - | - | - | - | - | - | 4 | 0 | - | - | " " |
| S3 | ⑧ | 5 | 48 | - | - | - | - | - | - | - | - | - | - | 5 | 8 | - | - | " " |
| * S4 | ⑥ | 6 | 80 | 30 | - | 109 | 101 | 80 | 56 | 65 | 65 | 74 | 47 | 4 | 8 | 1 | 7 | Haunch |
| S5 | Str. | 4 | 13 | - | - | - | - | - | - | - | - | 91 | - | 42 | 8 | - | - | T/SL |
| * S6 | " | 5 | 13 | - | - | - | - | - | - | - | - | 127 | - | 43 | 1 | - | - | B/SL |
| S7 | ⑦ | 6 | 158 | - | - | - | - | - | - | - | - | - | - | 6 | 6 | 5 | 3 | T/ST |
| S8 | Str. | 6 | 68 | - | - | - | - | - | - | - | - | - | - | 5 | 3 | - | - | B/ST |
| S9 | " | 4 | 12 | - | 12 | 18 | - | - | - | - | - | - | - | 41 | 0 | - | - | LB |
| S10 | ⑦ | 6 | - | - | 144 | - | - | - | - | - | - | - | - | 11 | 5 | 10 | 2 | T/ST |
| S11 | Str. | 6 | - | - | 144 | - | - | - | - | - | - | - | - | 10 | 2 | - | - | B/ST |
| S12 | " | 4 | - | 17 | - | - | - | 35 | - | - | - | - | - | 45 | 0 | - | - | T/SL |
| * S13 | " | 5 | - | 20 | - | - | - | 50 | - | - | - | - | - | 45 | 5 | - | - | B/SL |
| S14 | " | 4 | - | 18 | - | - | - | 18 | 12 | - | - | - | - | 31 | 0 | - | - | LB |
| S15 | ⑦ | 6 | - | - | - | 216 | - | - | - | - | - | - | - | 13 | 10 | 12 | 7 | T/ST |
| S16 | Str. | 6 | - | - | - | 216 | - | - | - | - | - | - | - | 12 | 7 | - | - | B/ST |
| S17 | " | 4 | - | - | 21 | - | - | - | - | - | - | - | - | 40 | 7 | - | - | T/SL |
| * S18 | " | 5 | - | - | 28 | - | - | - | - | - | - | - | - | 41 | 0 | - | - | B/SL |
| S19 | ⑦ | 6 | - | - | - | - | 201 | - | - | - | - | - | - | 16 | 0 | 14 | 9 | T/ST |
| S20 | Str. | 6 | - | - | - | - | 201 | - | - | - | - | - | - | 14 | 9 | - | - | B/ST |
| S21 | ⑦ | 6 | - | - | - | - | - | 159 | - | - | - | - | - | 19 | 3 | 18 | 0 | T/ST |
| S22 | Str. | 6 | - | - | - | - | - | 159 | - | - | - | - | - | 18 | 0 | - | - | B/ST |
| S23 | " | 4 | - | - | - | - | 18 | - | - | 12 | 12 | - | - | 37 | 0 | - | - | LB |
| S24 | ⑦ | 6 | - | - | - | - | - | - | 56 | - | - | - | - | 21 | 4 | 20 | 1 | T/ST |
| S25 | ⑦ | 6 | - | - | - | - | - | - | 55 | - | - | - | - | 23 | 5 | 22 | 2 | " |
| S26 | Str. | 6 | - | - | - | - | - | - | 56 | - | - | - | - | 20 | 1 | - | - | B/ST |
| S27 | " | 6 | - | - | - | - | - | - | 55 | - | - | - | - | 22 | 2 | - | - | " |
| S28 | " | 4 | - | - | - | 39 | - | - | 42 | - | - | - | - | 31 | 8 | - | - | T/SL |
| * S29 | " | 5 | - | - | - | 55 | - | - | 64 | - | - | - | - | 32 | 1 | - | - | B/SL |
| S30 | " | 4 | - | - | - | - | - | - | - | - | - | 12 | - | 42 | 0 | - | - | LB |
| S31 | " | 4 | - | - | - | - | - | - | - | - | - | - | 12 | 26 | 0 | - | - | LB |
| S32 | " | 4 | - | - | - | 11 | - | - | - | 51 | 20 | - | - | 28 | 0 | - | - | T/SL |
| * S33 | " | 5 | - | - | - | 16 | - | - | - | 73 | 24 | - | - | 28 | 5 | - | - | B/SL |
| S34 | " | 4 | - | - | - | - | 46 | - | - | - | 50 | - | - | 37 | 8 | - | - | T/SL |
| * S35 | " | 5 | - | - | - | - | 65 | - | - | - | 80 | - | - | 38 | 1 | - | - | B/SL |
| S36 | " | 4 | - | - | - | - | - | - | - | 30 | 12 | - | - | 19 | 2 | - | - | T/SL |
| S37 | " | 5 | - | - | - | - | - | - | - | 47 | 17 | - | - | 19 | 7 | - | - | B/SL |
| S38 | " | 4 | - | - | - | - | - | - | - | - | - | - | 96 | 26 | 8 | - | - | T/SL |
| * S39 | " | 5 | - | - | - | - | - | - | - | - | - | - | 130 | 27 | 1 | - | - | B/SL |
| * S40 | " | 5 | - | 5 | - | 8 | 12 | 14 | - | 21 | 31 | 40 | - | 15 | 0 | - | - | T/S @ Piers |
| S41 | ⑦ | 6 | - | 159 | - | - | - | - | - | - | - | - | - | 9 | 3 | 8 | 0 | T/ST |
| S42 | ⑦ | 6 | - | - | - | - | - | - | - | 43 | - | - | - | 25 | 8 | 24 | 5 | " |
| S43 | Str. | 6 | - | - | - | - | - | - | - | 43 | - | - | - | 24 | 5 | - | - | B/ST |
| S44 | ⑦ | 6 | - | - | - | - | - | - | - | 43 | - | - | - | 28 | 0 | 26 | 9 | T/ST |
| S45 | Str. | 6 | - | - | - | - | - | - | - | 43 | - | - | - | 26 | 9 | - | - | B/ST |
| S46 | ⑦ | 6 | - | - | - | - | - | - | - | 43 | - | - | - | 30 | 4 | 29 | 1 | T/ST |
| S47 | Str. | 6 | - | - | - | - | - | - | - | 43 | - | - | - | 29 | 1 | - | - | B/ST |
| S48 | ⑦ | 6 | - | - | - | - | - | - | - | - | 44 | - | - | 33 | 2 | 31 | 11 | T/ST |
| S49 | Str. | 6 | - | - | - | - | - | - | - | - | 44 | - | - | 31 | 11 | - | - | B/ST |
| S50 | ⑦ | 6 | - | - | - | - | - | - | - | - | 43 | - | - | 36 | 0 | 34 | 9 | T/ST |
| S51 | Str. | 6 | - | - | - | - | - | - | - | - | 43 | - | - | 34 | 9 | - | - | B/ST |

## SLAB

| MARK | TYPE | SIZE | NO. OF BARS IN SPAN EAST OF PIER 122 | 123 | 124 | 125A | 126 | 127 | 128 | 129A | 129B | 130A | 131 | LENGTH ft. | in. | a ft. | in. | LOCATION |
|---|---|---|---|---|---|---|---|---|---|---|---|---|---|---|---|---|---|---|
| S52 | ⑦ | 6 | - | - | - | - | - | - | - | - | 43 | - | - | 38 | 10 | 37 | 7 | T/ST |
| S53 | Str. | 6 | - | - | - | - | - | - | - | - | 43 | - | - | 37 | 7 | - | - | B/ST |
| S54 | ⑦ | 6 | - | - | - | - | - | - | - | - | - | 37 | - | 41 | 5 | 40 | 2 | T/ST |
| S55 | Str. | 6 | - | - | - | - | - | - | - | - | - | 37 | - | 40 | 2 | - | - | B/ST |
| S56 | ⑦ | 6 | - | - | - | - | - | - | - | - | - | 37 | - | 44 | 0 | 42 | 9 | T/ST |
| S57 | Str. | 6 | - | - | - | - | - | - | - | - | - | 37 | - | 42 | 9 | - | - | B/ST |
| S58 | ⑦ | 6 | - | - | - | - | - | - | - | - | - | 37 | - | 23 | 7 | 22 | 3 | T/ST |
| S59 | Str. | 6 | - | - | - | - | - | - | - | - | - | 37 | - | 34 | 0 | - | - | B/ST |
| S60 | ⑦ | 6 | - | - | - | - | - | - | - | - | - | 36 | 93 | 25 | 6 | 24 | 3 | T/ST |
| S61 | Str. | 6 | - | - | - | - | - | - | - | - | - | 36 | 93 | 36 | 6 | - | - | B/ST |
| * S62 | Str. | 6 | - | - | - | - | - | - | - | - | - | 73 | 93 | 26 | 2 | - | - | T/ST |
| * S63 | Str. | 6 | - | - | - | - | - | - | - | - | - | 73 | 93 | 13 | 10 | - | - | B/ST |
| S64 | Str. | 6 | - | 159 | - | - | - | - | - | - | - | - | - | 8 | 0 | - | - | " |
| * S65 | ⑥ | 6 | - | 50 | - | - | - | - | - | - | - | - | - | 9 | 7 | 6 | 6 | Haunch |
| * S66 | ⑥ | 6 | - | - | 72 | - | - | - | - | - | - | - | - | 10 | 5 | 7 | 4 | " |
| | | | | | | | | | | | | | | | | | | |
| LS1 | ⑧ | 5 | 2 | - | - | - | 2 | - | - | - | - | 2 | - | 6 | 5 | - | - | Light Std. |
| LS2 | ⑨ | 5 | 2 | - | - | - | 2 | - | - | - | - | 2 | - | 7 | 7 | - | - | " " |
| LS3 | ⑪ | 5 | 3 | - | - | - | 3 | - | - | - | - | 3 | - | 10 | 3 | - | - | " " |
| LS4 | ⑭ | 5 | 4 | - | - | - | 4 | - | - | - | - | 4 | - | 9 | 2 | - | - | " " |
| * SS1 | ⑪ | 4 | - | - | - | 4 | 4 | - | - | - | - | - | - | 6 | 10 | - | - | SS/NF |
| * SS1 | ⑪ | 4 | - | - | - | 4 | 4 | - | - | - | - | - | - | 6 | 10 | - | - | SS/SF |
| * SS2 | Str. | 6 | - | - | - | 6 | 6 | - | - | - | - | - | - | 2 | 6 | - | - | " |
| * SS3 | ⑩ | 6 | - | - | - | 4 | 4 | - | - | - | - | - | - | 8 | 10 | - | - | SS/NF |
| * SS4 | ⑩ | 6 | - | - | - | 4 | 4 | - | - | - | - | - | - | 6 | 4 | - | - | SS/SF |
| | | | | | | | | | | | | | | | | | | |
| * DD1 | Str. | 6 | - | - | - | - | - | - | - | - | 3 | 3 | - | 5 | 6 | - | - | Slab @ Drain |
| * DD2 | ⑦ | 6 | - | - | - | - | - | - | - | - | 2 | 2 | - | 6 | 3 | 5 | 6 | " " |
| DD3 | ② | 5 | - | - | - | - | - | - | - | - | 2 | 2 | - | 9 | 9 | - | - | Barrier @ Drain |
| | | | | | | | | | | | | | | | | | | |

T/ST = Top of Slab Transverse
B/ST = Bott. " " "
T/SL = Top " " Longitudinal
B/SL = Bott. " " "
LB = Longitudinal Barrier Wall
SS/NF = Sign Support, North Fascia
SS/SF = " " , South "

Long. Haunch Bars are included with B/SL Bars.

* Indicates no change

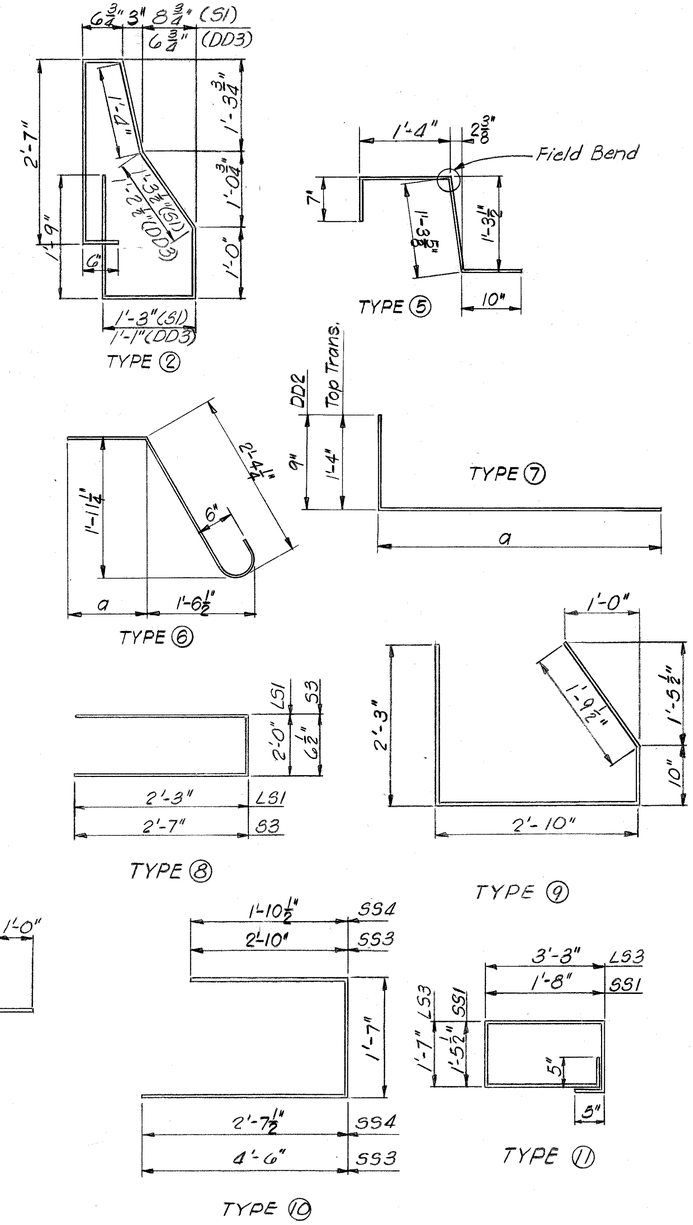


DECK BAR LIST △

Sheet No. 54

**COMMONWEALTH OF KENTUCKY**
BUREAU OF HIGHWAYS
FRANKFORT
COUNTY OF
**JEFFERSON**
**LOUISVILLE-LEXINGTON**
ROAD

54

STATION 267+00 | P. E. PROJECT NO. I64-2(92)

| CONSTRUCTION PROJECT NO. | MAINTENANCE PROJECT NO. | DRAWING NO. |
|---|---|---|
| | | 19238 |

△ Indicates revision for G.M. Barrier — DATE 7-75
REVISED ⒷⒶ — DATE 3-76
REVISED ⒷⒷ — DATE 6-76

UPDATE DATE
LETTING DATE

DESIGNED BY DMB — CHECKED BY RBS — DATE
DETAILED BY PME — CHECKED BY RHMC — DATE April 1, 75
TRACED BY — CHECKED BY — DATE

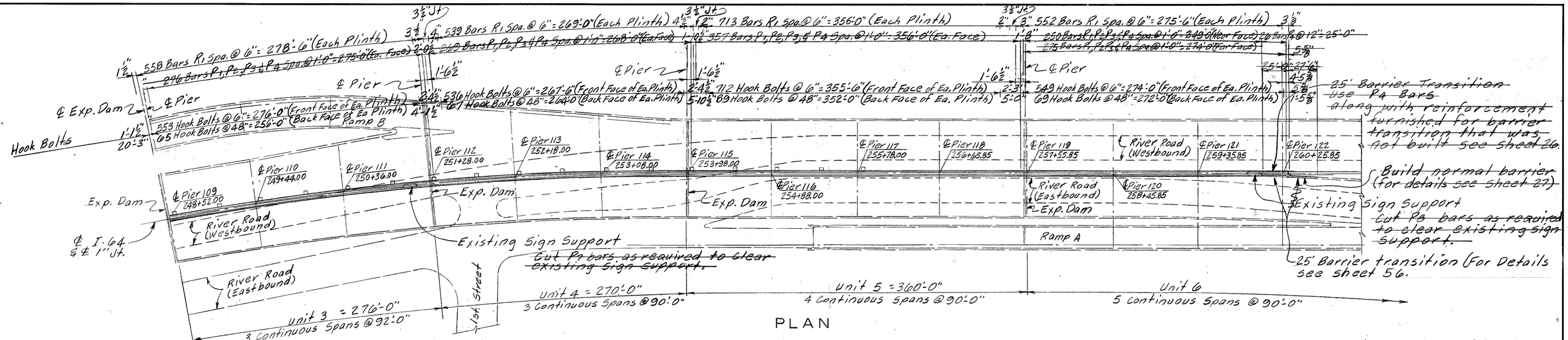


PLAN

Remove Guardrail and Guardrail Posts and store at a site near Job site as directed by the Engineer. These items shall remain the property of the Bureau. The cost of this work shall be incidental to the Lump Sum Bid for Removal of Existing Reinforced Concrete.

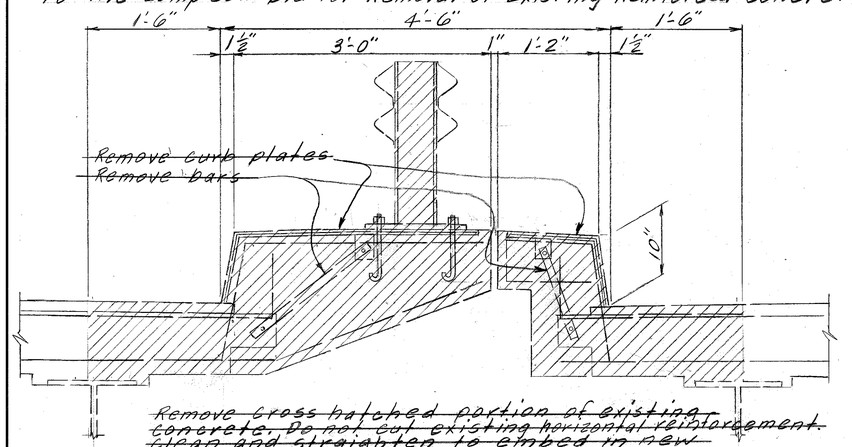


TYPICAL SECTION
(Showing existing ~~concrete~~, guardrail and guardrail post ~~portion of expansion dam~~ to be removed)

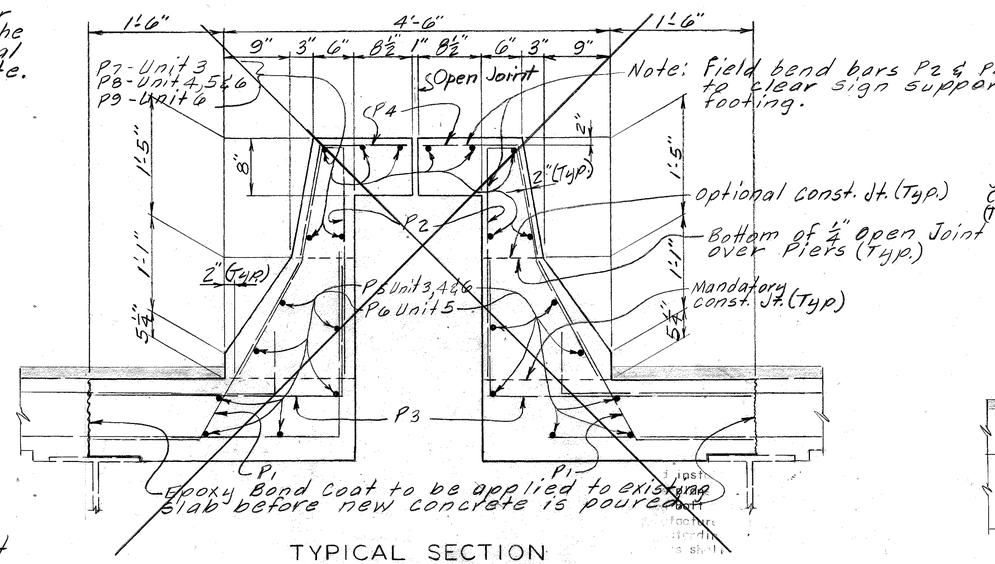


TYPICAL SECTION

Note: Bars P1, P2, P3 & P4 may be field bent as required in barrier transition.

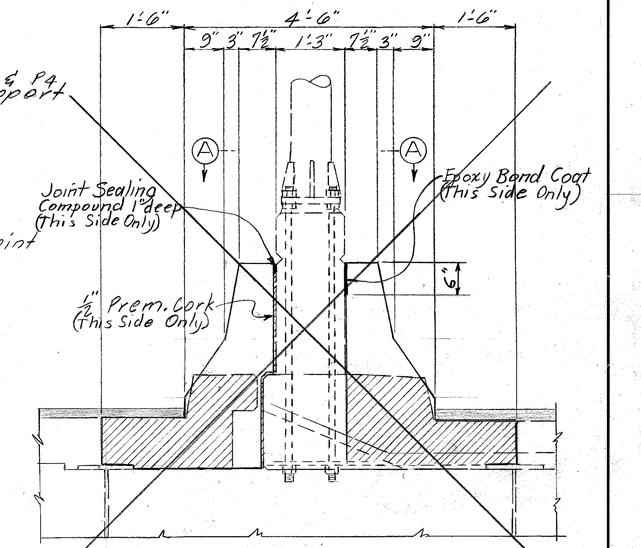


SECTION AT SIGN SUPPORT
Details not shown same as Typical Section

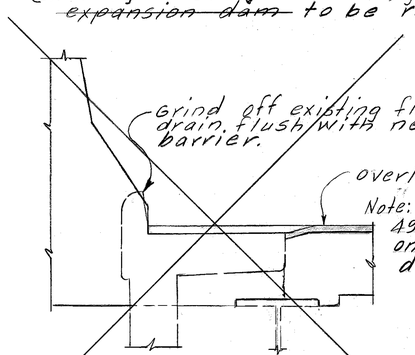


SECTION AT FLOOR DRAINS

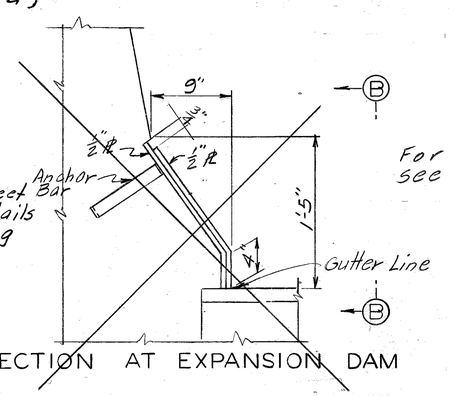


SECTION AT EXPANSION DAM

For Section B-B see sheet 52.

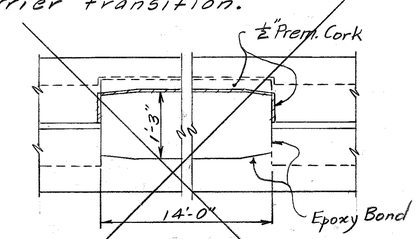


PLAN VIEW A-A

PLINTH
~~BARRIER~~ UNIT 3, 4, 5, & 6

CONSTRUCTION REVISION

Sheet 55

**COMMONWEALTH OF KENTUCKY**
**BUREAU OF HIGHWAYS**
**FRANKFORT**
**COUNTY OF**
JEFFERSON
LOUISVILLE – LEXINGTON
**ROAD**

55

| STATION | P. E. PROJECT NO. | | |
|---|---|---|---|
| CONSTRUCTION PROJECT NO. | MAINTENANCE PROJECT NO. | | DRAWING NO. 19238 |

UPDATE DATE
LETTING DATE

Replaces Barrier with Plinth

REVISED DATE 6/76
REVISED DATE
REVISED DATE

DESIGNED BY Strater CHECKED BY A. DUNCAN DATE 3/76
DETAILED BY CHECKED BY DATE
TRACED BY CHECKED BY DATE

N9947

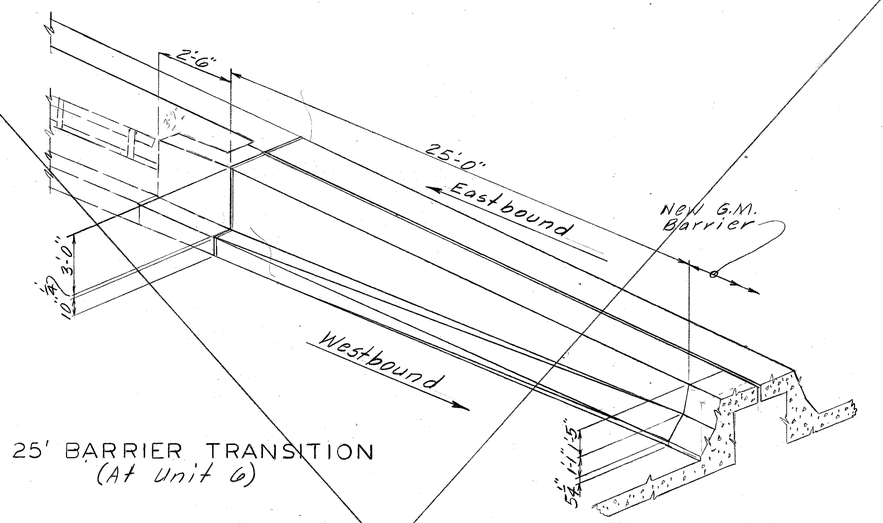


25' BARRIER TRANSITION
(At Unit 6)

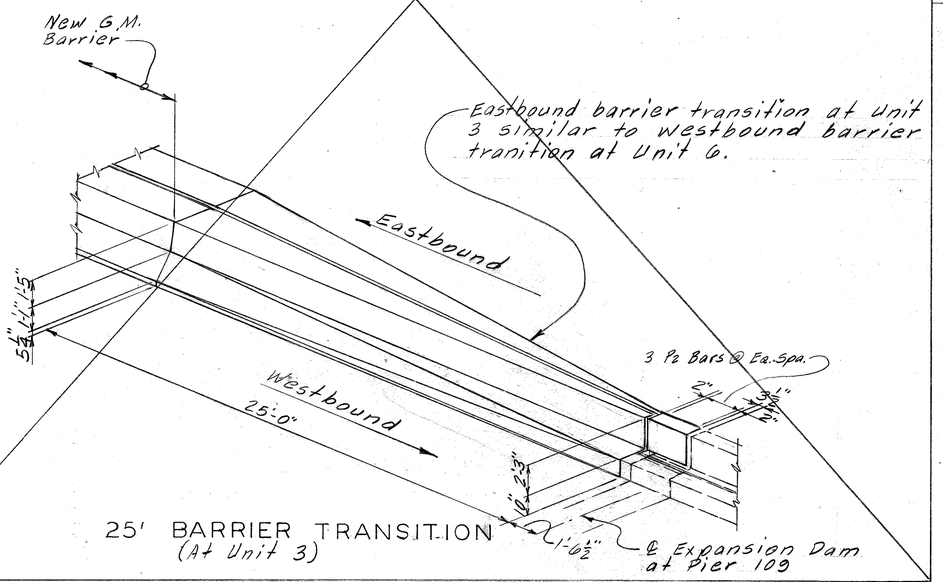


25' BARRIER TRANSITION
(At Unit 3)

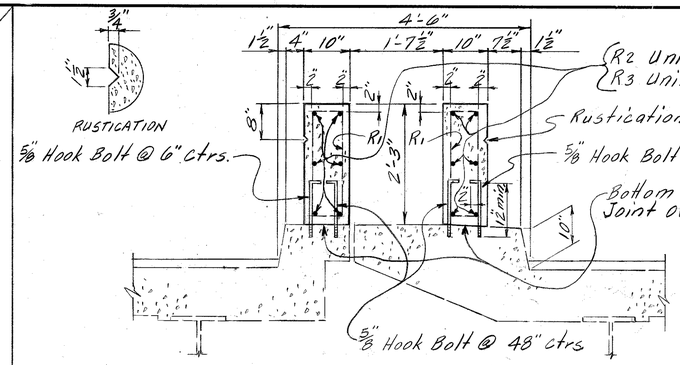


TYPICAL SECTION

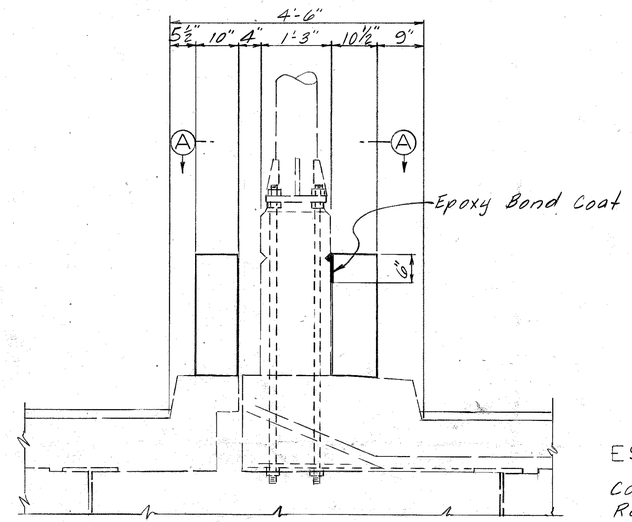


SECTION AT SIGN SUPPORT
(Details not shown same as Typical Section)

EXPANSION HOOK BOLTS: This work shall consist of furnishing and installing expansion hook bolts for concrete plinth. The expansion anchor for the bolt size indicated on the plans shall be Bethlehem Mine Roof Expansion Type with K-I Shell, Phillips Red Head Anchor, Chicago Expansion Bolt Company-Special Flush Self Drilling Anchor, or approved equal installation shall conform to the manufacturer's recommendation for the specific anchor used. The expansion type sleeve shall be capable of withstanding a pull-out test of 9,000 pounds, and shall be field tested as directed by the Engineer. The hook bolts shall conform to the requirements of the current Standard Specifications.
Expansion hook bolts of the size and length indicated shall be paid for at the contract unit price each, which price will be payment in full for the expansion anchor with hook bolt furnished and installed.

## BILL OF REINFORCEMENT

| Mark | Type | No. | Size | Length Ft. | Length In. | Location |
|---|---|---|---|---|---|---|
| P1 | 1 | 2329 | #5 | 3 | 9 | Barrier |
| P2 | 2 | 2332 | #5 | 5 | 7 | " |
| P3 | 3 | 2329 | #5 | 4 | 5 | " |
| P4 | 1 | 2354 | #5 | 2 | 1 | " |
| P5 | Str. | 336 | #5 | 36 | 5 | Barrier Unit 3 & Unit 4 & Unit 6 |
| P6 | " | 140 | #5 | 38 | 8 | " " 5 |
| P7 | " | 90 | #5 | 32 | 0 | " " 3 |
| P8 | " | 300 | #5 | 31 | 4 | " " 4, 5 & 6 |
| P9 | " | 10 | #5 | 6 | 6 | " " 6 |
| | | | | | | |
| R1 | 4 | 2362 | #4 | 5 | 7 | Plinth Unit 3, 4, 5 & 6 |
| R2 | Str. | 108 | #4 | 32 | 3 | " " 3 |
| R3 | Str. | 360 | #4 | 32 | 6 | " " 4, 5 & 6 |

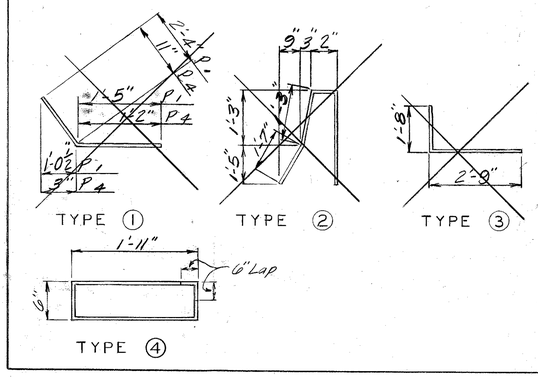


ESTIMATE OF QUANTITIES

Concrete Class AA — 165.0 ~~495.4~~ Cu. Yds
Reinforcement — ~~69720.~~ 18952 Lbs.

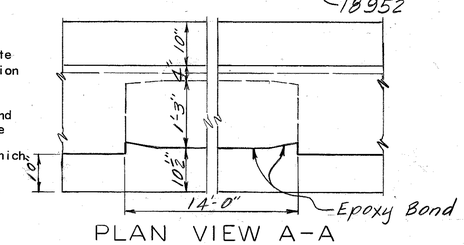


PLAN VIEW A-A

CONSTRUCTION REVISION

Sheet 56

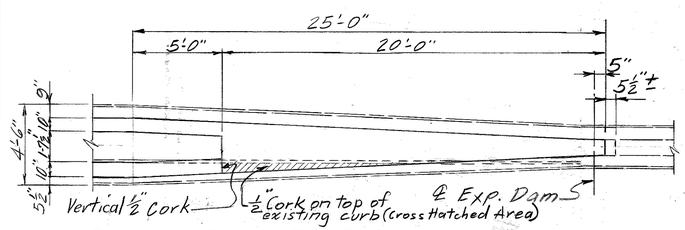


PLAN OF 25' BARRIER TRANSITION
(At Unit 3)

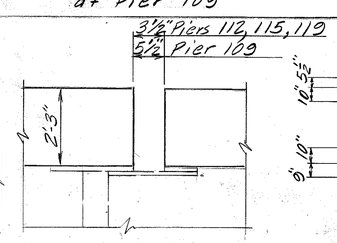


TYPICAL SECTION
(Showing Plinth @ Exp. Dams)

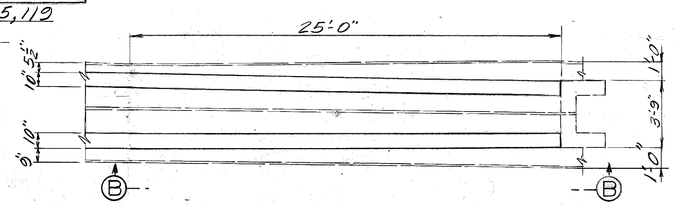


PLAN OF 25' BARRIER TRANSITION
(At Unit 6)

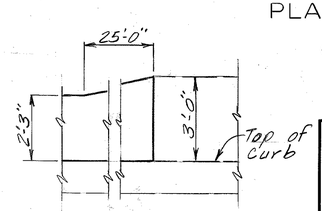


VIEW B-B

PLINTH
~~BARRIER~~ UNIT 3,4,5 & 6

COMMONWEALTH OF KENTUCKY
BUREAU OF HIGHWAYS
FRANKFORT
COUNTY OF
JEFFERSON
LOUISVILLE - LEXINGTON
ROAD
STATION — P. E. PROJECT NO.
CONSTRUCTION PROJECT NO. — MAINTENANCE PROJECT NO. — DRAWING NO. 19238

56

UPDATE DATE
LETTING DATE

DESIGNED BY Strahan — CHECKED BY — DATE 6-76
DETAILED BY A. DUNCAN — CHECKED BY — DATE 3/76
TRACED BY — CHECKED BY — DATE

REVISED (3) Replaces Barrier with Plinth — DATE
REVISED — DATE
REVISED — DATE